DUBAI PLAST®
Solutions For Any Challenge System

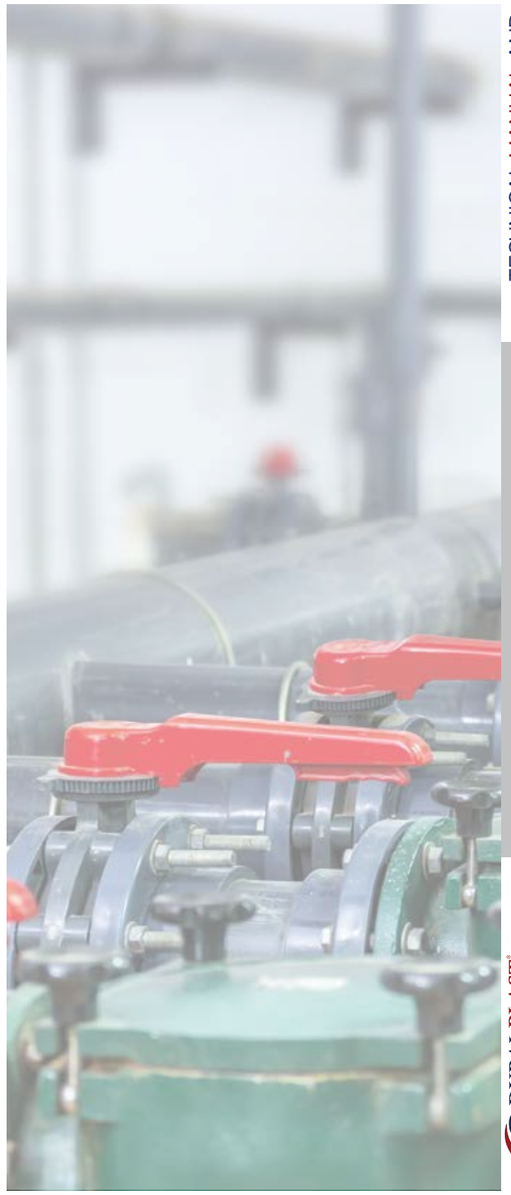

TECHNICAL MANUAL AND
PRODUCT RANGE 2023







DUBAI PLAST®
Solutions For Any Challenge System

MADE IN
UNITED ARAB EMIRATES

DUBAI PLAST®
Solutions For Any Challenge System

PVC-U SYSTEMS

for Industrial and irrigation Application

PIPES, FITTINGS, VALVES
AND ACCESSORIES.

CONTACT US

Radix plastic industries LLC
United Arab Emirates - um Elqaiwin
Emirates modern industrial area

+ 971 5 8925 5288

Info@radixplast.com

www.radixplast.com

2023

ALL RIGHTS RESERVED

WWW.RADIXPLAST.COM

TECHNICAL MANUAL AND
PRODUCT RANGE
2023



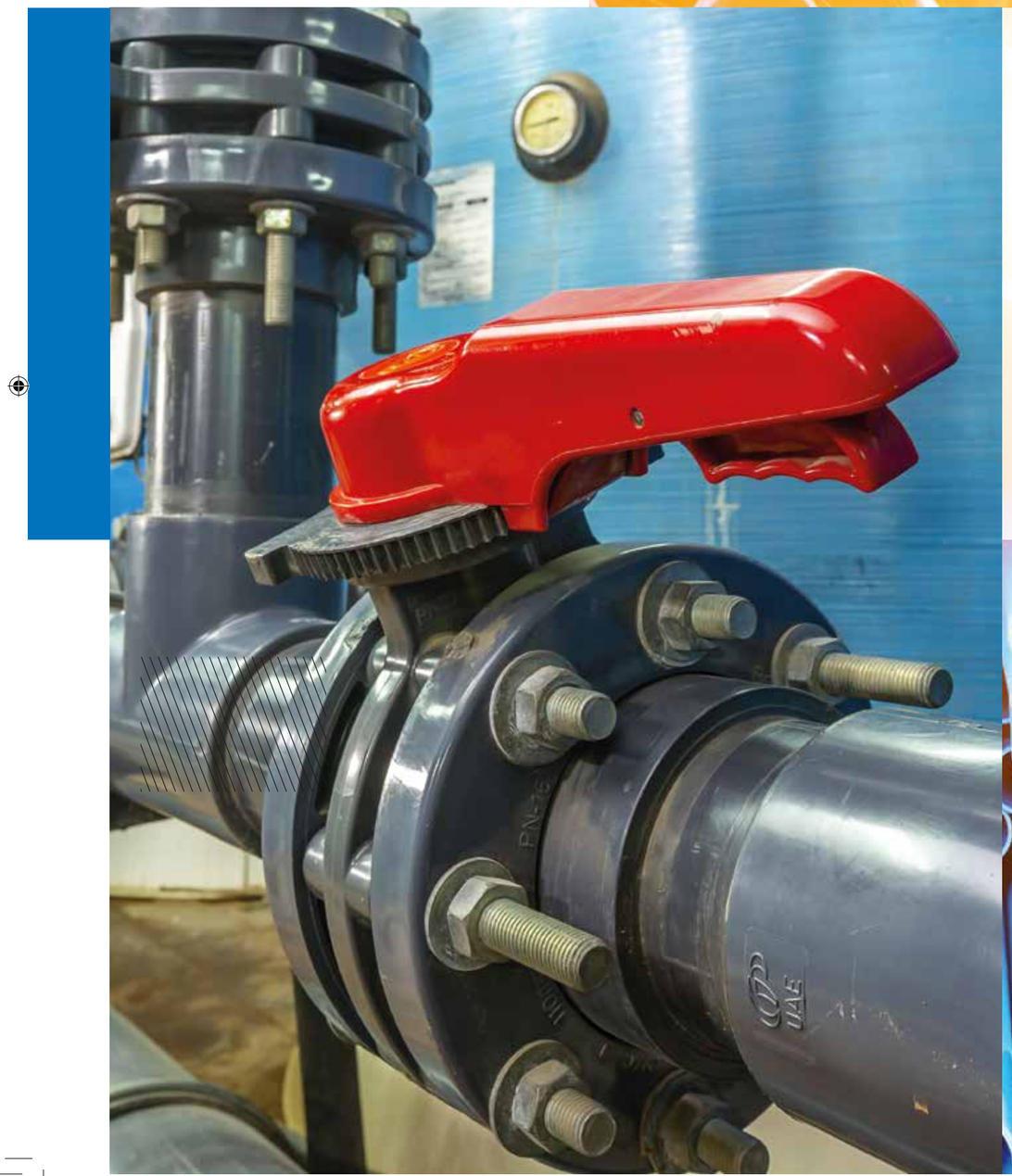



CERTIFICATES



2023

CONTENTS

SOLUTIONS FOR ANY CHALLENGE SYSTEM.

INTRODUCTION 1 - 8

STANDARDS 4

CEMENTED SYSTEM 5 - 7

PUSH-FIT SYSTEM 8

PRODUCT RANGE

- PIPES 9 - 13
- CEMENTED SYSTEM 14 - 40
- IRRIGATION PVC-U FITTINGS SYSTEM 41 - 56
- PUSH FIT SYSTEM 57 - 68
- VALVES 70 - 114

Radix Plastic Industries LLC

We Are An International Leading UPVC Pipe System Manufacturer.

Our Sole Aim And Goal Is To Globally Provide Superior Value, Healthy, Reliable And Cost Efficient Solutions. We Use The Most Advanced Production Techniques And Advanced Manufacturing Skills To Provide Pipes And Fittings Systems With Elite Standards.





SOLUTIONS FOR ANY CHALLENGE SYSTEM.



PIPES SYSTEM



CEMENTED SYSTEM



PUSH FIT SYSTEM



VALVES SYSTEM

SOLUTIONS FOR ANY CHALLENGE SYSTEM.

PIPES SYSTEM

PVC PIPE - WORLD LEADER

UPVC PIPE IS THE WORLDS MOST WIDELY USED MEDIUM FOR CONVEYANCE OF FLUIDS. AFTER CENTURIES OF USE OF ANCIENT MATERIALS SUCH AS CLAY, LEAD, IRON AND MORE RECENTLY STEEL, DUCTILE IRON AND ASBESTOS CEMENT, PVC HAS, IN A COMPARAIVELY SHORT 50 YEARS, INVADED ALL OF THE TRADITIONAL APPLICATIONS OF THESE MATERIALS TO BECOME THE PREMIER PIPE MATERIAL, MEASURED BY LENGTH OR VALUE, IN THE WORLD TODAY.



OUR PIPES ARE PRODUCED ACCORDING TO THIS INTERNATIONAL SPECIFICATION

1- German specifications DIN 8061-8062.

2- German specification DIN 19534.

3- German specification DIN 19531.

4- German specification DIN 4925, DIN 4926.

5- Egyption specification standards ES: 848 - 1/2008 & ISO4422/1996.

6- Egyption standards ES:1717-2008 & ISO 4435 / 2003.

7- British specification B.S 3505.

8- ARENTO specification T.C.161A.

9- American specification ASTMD 1785 .

10- American specification ASTMD 2241 .

11- Europen specification E.N 1452-2.

12- British specification B.S 5481

13- ISO specification 4422-2/1996.

14- ISO specification 4435/2003.

15- Specification BSEN5008-2-4/1994.

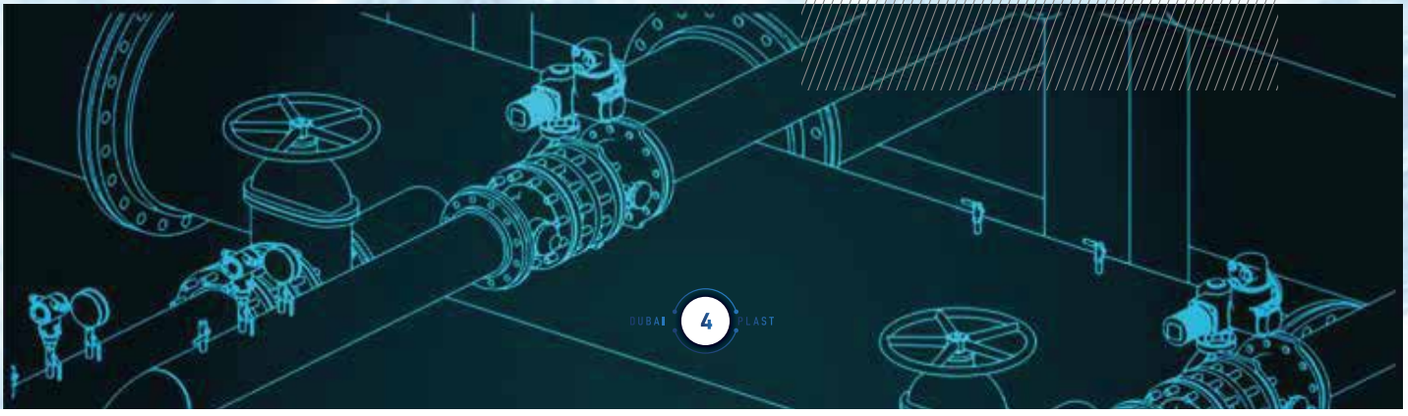

UPVC FITTINGS FOR HIGH PRESSURE

1 - CEMENTED SYSTEM

For safe, reliable and cost effective treatment and distribution of water and chemicals, DP Piping Systems has a comprehensive cemented system portfolio, which includes corresponding jointing technologies, fittings, valves, sensors, pipes and related tools as well as services.

The PVC-U range of DP Piping Systems, which has been leading the industry for decades through continous innovation and proven benefits on safety, efficiency and reliability, covers all aspects required to build, maintain and operate industrial piping systems.

Main benefits



SAFETY
System lifetime warranty



SIMPLICITY
Simple installation with low costs for tools



EFFICIENCY
Excellent price-performance ratio



ENVIRONMENT
Low carbon & water footprint

PVC-U METRIC SYSTEMS



Scope
This specification covers requirements for the DP PVC-U Piping System intended for a wide range of applications including water, wastewater and effluent treatment as well as a wide range of chemical applications.

The components of the PVC-U systems are in accordance with the following standards.

Basic System Data
PVC-U pipes, fittings and valves from DP Piping Systems shall be manufactured from unplasticized polyvinylchloride the operation with water as medium (20°C). PVC-U has also an optimal chemical resistance against many mineral acids, bases and salt solutions.

For detailed information, please refer to the list of chemical resistance provided by DP Piping Systems.

The raw material used shall be material designed for use with pressure bearing piping systems with long term hydrostatic properties in accordance with DIN 8063 – EN1422.

Characteristic	Value
Density	1.38 g/cm3
Tensile E-modules	>2400 N/mm2
Charpy notched impact strength at 23° C	>8 kJ/m2
Charpy notched impact strength at 0° C	>3 kJ/m2
Vicat heat distortion temp. B/50N	≥76° C
Chemical resistance	DIBT agreement
Thermal expansion coefficient	0.07 - 0.08 mm/mK
Temperature range in °C	0°C - 60°C
Colour	dark grey



PVC-U IMPERIAL (INCH) SYSTEMS

Scope
This specification covers requirements for the DP PVC-U Piping System intended for a wide range of applications including water, wastewater and effluent treatment as well as a wide range of chemical applications.

The components of the PVC-U Imperial (inch)-sized piping systems are in accordance with the following standards.

Basic System Data
PVC-U pipes, fittings and valves from DP Piping Systems shall be manufactured from unplasticized polyvinylchloride, the operation with water as medium (20°C). PVC-U has also an optimal chemical resistance against many mineral acids, bases & salt solutions.

For detailed information, please refer to the list of chemical resistance provided by DP Piping Systems.

The raw material used shall be material designed for use with pressure bearing piping systems with long term hydrostatic properties in accordance with ASTM-D2467, D2464 and British standards BSEN which supercedes BS3505.

Characteristic	Value
Density	1.38 g/cm3
Tensile E-modules	>2400 N/mm2
Charpy notched impact strength at 23 °C	≥8 kJ/m2
Charpy notched impact strength at 0°C	≥3 kJ/m2
Vicat heat distortion temp. B/50N	≥76 °C
Chemical resistance	DIBT agreement
Thermal expansion coefficient	0.07 - 0.08 mm/mK
Temperature range in °C	0°C - 60°C
Colour	dark grey



2- PUSH-FIT SYSTEM

Easy to install.

Due to the rubber ring push-fit system

Controlled Expansion

THIS PRODUCT IS AVAILABLE
IN PN 10 AND PN 16

The raw material used shall be material designed for use with pressure bearing piping systems with long term hydrostatic properties in accordance with DIN 8063 – EN1422.

Characteristic	Value
Density	1.38 g/cm3
Tensile E-modules	>2400 N/mm2
Charpy notched impact strength at 23° C	>8 kJ/m2
Charpy notched impact strength at 0° C	>3 kJ/m2
Vicat heat distortion temp. B/50N	≥76° C
Chemical resistance	DIBT agreement
Thermal expansion coefficient	0.07 - 0.08 mm/mK
Temperature range in °C	0°C - 60°C
Colour	dark grey

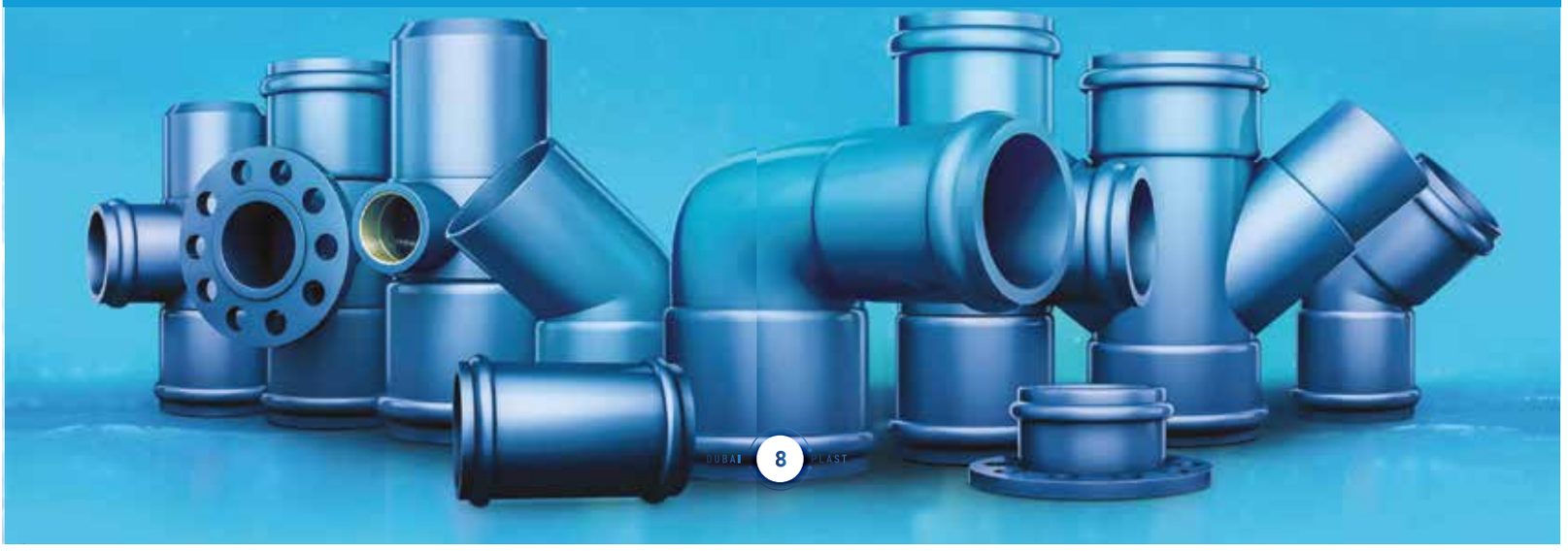

PVC-U PIPES RANGE



DUBAI PLAST pipes for water supply irrigation pressure from 2 bar up to 16 bar According to German specification Din 8061-8062 .

Normal Outside Diameter mm	socket Depth mm	class I bar2		class II bar4		class III bar6		class IV bar10		class V bar16	
		No Thick of wall mm	No . Wt Kg/m	No Thick of wall mm	No . Wt Kg/m	No Thick of wall mm	No . Wt Kg/m	No Thick of wall mm	No . Wt Kg/m	No Thick of wall mm	No . Wt Kg/m
10	–	–	–	–	–	–	–	–	–	1.00	0.045
12	–	–	–	–	–	–	–	–	–	1.00	0.055
16	–	–	–	–	–	–	–	–	–	1.20	0.09
20	–	–	–	–	–	–	–	–	–	1.50	0.137
25	–	–	–	–	–	–	–	1.5	0.174	1.90	0.212
32	–	–	–	–	–	–	–	1.8	0.264	2.40	0.342
40	–	–	–	–	–	1.8	0.334	1.9	0.35	3.00	0.525
50	75	–	–	–	–	1.8	0.422	2.4	0.552	3.70	0.809
63	100	–	–	–	–	1,9	0.562	3	0.854	4.70	1.289
75	110	–	–	1.8	0.642	2.2	0.782	3.6	1.22	5.60	1.82
90	110	–	–	1.8	0.774	2.7	1.13	4.3	1.75	6.70	2.61
110	115	1.8	0.95	2.2	1.16	3.2	1.64	5.3	2.61	8.20	3.9
125	120	1.8	1.08	2.5	1.48	3.7	2.13	6	3.34	9.30	5.01
140	125	1.8	1.21	2.8	1.84	4.1	2.65	6.7	4.18	10.40	6.27
160	132	1.8	1.39	3.2	2.41	4.7	3.44	7.7	5.47	11.90	8.17
180	145	1.8	1.57	3.6	3.02	5.3	4.37	8.6	6.88	13.40	10.4
200	145	1.8	1.74	4	3.7	5.9	5.37	9.6	8.51	14.90	12.8
225	152	1.8	1.96	4.5	4.7	6.6	6.76	10.8	10.8	16.70	16.1
250	160	2	2.4	4.9	5.65	7.3	8.31	11.9	13.2	18.60	19.9
280	170	2.3	3.11	5.5	7.11	8.2	10.4	13.4	16.6	20.80	24.9
315	180	2.5	3.78	6.2	9.02	9.2	13.2	15	20.9	23.40	31.5
355	180	2.9	4.87	7	11.4	10.4	16.7	16.9	26.5	26.30	39.9
400	200	3.2	6.1	7.9	14.5	11.7	21.1	19.1	33.7	29.70	50.8
450	200	3.6	7.65	8.9	18.3	13.2	26.8	21.5	42.7	–	–
500	250	4	9.37	9.8	22.4	14.6	32.9	23.9	52.6	–	–
560	260	4.5	11.8	11	28.1	16.4	41.4	26.7	65.8	–	–
630	300	5	14.7	12.4	35.7	18.4	52.5	30	83.2	–	–
710	320	5.7	18.9	14	45.3	20.7	66.1	–	–	–	–
800	360	6.4	23.9	15.7	57.2	23.3	83.9	–	–	–	–
900	410	7.2	30.2	17.7	72.5	26.3	106	–	–	–	–
1000	455	8	37.1	19.7	89.6	29.2	131	–	–	–	–

- The Length Of Pipe 6 Meter Include socket or as requested.
- Each pipe has one rubber ring to connection.
- The color’s D.grey or as requested.

DUBAI PLAST Pipes For Drainage and sewerage under Gravity According to German Specification Din 19534

Nominal Size mm	Outside Diameter		Wall thickness		Insertion depth	Weight Kg/m
	((D	Tolerance	((S	Tolerance		
110	*110	0.3	3	0.5	115	1.63
125	**125	0.3	3	0.5	120	1.87
160	160	0.4	3.6	0.6	132	2.65
200	200	0.4	4.5	0.7	145	4.12
250	250	0.5	6.1	0.9	160	7
300	315	0.6	7.7	1	180	11.11
400	400	0.7	9.8	1.2	200	17.8
500	500	0.9	12.2	1.5	250	27.649
630	630	1.1	15.4	1.8	300	43.944

- The length of pipe 6 - meter include socket or as requested .
- Each pipe has one rubber ring to connection .
- The color's D - gray or as requested .

DUBAI PLAST Pipes for telephone duct According to ARENTO specification T.C 161 A

Nominal Size mm	Outside Diameter		Wall thickness		Socket depth MM
	(S)	Tolerance	(S)	Tolerance	
50	50	0.2	1.8	0.4	80
110	110	0.3	3.2	0.6	170

- Length of pipe 6 meter not incl. the socket.
- Eash pipe has one rubber ring to connection .

DUBAI PLAST PIPES FOR WATER SUPPLY AND IRRIGATION ACCORDING TO EGYPTIAN STANDARD ES : 848 - 1/2008 - ISO 4422 - / 1996

Normal Outside Diameter mm	6 Bar S 16.7 SDR 34.4 PN 6		8 Bar S 12.5 SDR 26 PN 8		10 Bar S 10 SDR 21 PN 10		12.5 Bar S 8 SDR 17 PN 12.5		16 Bar S 6.3 SDR 13.6 PN 16		25 Bar S 4 SDR 9 PN 25	
	No. Thick of wall mm	No. wt Kg/m	No. Thick of wall mm	No. wt Kg/m	No. Thick of wall mm	No. wt Kg/m	No. Thick of wall mm	No. wt Kg/m	No. Thick of wall mm	No. wt Kg/m	No. Thick of wall mm	No. wt Kg/m
20	–	–	–	–	–	–	–	–	1.5	0.137	2.3	0.196
25	–	–	–	–	–	–	1.5	0.17	1.9	0.212	2.8	0.294
32	–	–	–	–	1.6	0.264	1.9	0.277	2.4	0.342	3.6	0.482
40	–	–	1.6	0.291	1.9	0.35	2.4	0.437	3	0.525	4.5	0.75
50	–	–	2	0.422	2.4	0.552	3	0.683	3.7	0.809	5.6	1.16
63	1.9	0.562	2.5	0.717	3	0.854	3.8	1.09	4.7	1.29	7.1	2.04
75	2.2	0.782	2.9	0.99	3.6	0.122	4.5	1.54	5.6	1.82	8.4	2.6
90	2.7	1.13	3.5	1.43	4.3	1.75	5.4	2.21	6.7	2.61	10.1	4.14

Normal Outside Diameter mm	Bar 8 S 16 SDR 33 PN 8		Bar 12.5 S 10 SDR 21 PN 12.5		Bar 20 S 6.3 SDR 13.6 PN 20		Bar 25 S 5 SDR 11 PN 25	
	No. Thick of wall mm	No. wt Kg/m	No. Thick of wall mm	No. wt Kg/m	No. Thick of wall mm	No. wt Kg/m	No. Thick of wall mm	No. wt Kg/m
110	3.4	1.7	5.3	2.61	8.1	3.9	10	5
125	3.9	2.21	6	3.34	9.2	5.01	11.4	6.48
140	4.3	2.74	6.7	4.18	10.3	6.27	12.7	8.09
160	4.9	3.57	7.7	5.47	11.8	8.17	14.6	10.63
180	5.5	4.51	8.6	6.88	13.3	10.4	16.4	13.4
200	6.2	5.64	9.6	8.51	14.7	12.8	18.2	16.57
225	6.9	7.06	10.8	10.8	16.6	16.1	–	–
250	7.7	8.76	11.9	13.2	18.4	19.9	–	–
280	8.6	10.96	13.4	16.6	20.6	24.9	–	–
315	9.7	13.91	15	20.9	23.2	31.5	–	–
355	10.9	17.62	16.9	26.5	26.1	39.9	–	–
400	12.3	22.4	19.1	33.7	29.4	50.8	–	–
450	13.8	28.27	21.5	42.7	33.1	67.82	–	–
500	15.3	34.83	23.9	52.6	36.8	83.77	–	–
560	17.2	43.85	26.7	65.8	–	–	–	–
630	19.3	55.36	30	83.2	–	–	–	–
710	21.8	70.47	–	–	–	–	–	–
800	24.5	89.24	–	–	–	–	–	–

- The Length Of Pipe 6 Meter Inch Socket or as requested

Each Pipe Has One Rubber Ring To Connection And The Color D. grey or as requested.

- S is The Pipe Series And Equals $\frac{DN-EN}{2EN}$
- SDR is The Standard Dimension Ratio And Equal $\frac{DN-EN}{2EN}$
- S And SDR Are Related By The equation [SDR] = 2 (S) +1

- Dn= Nominal Outside Diameter
- En= Nominal Wall Thickness

DUBAI PLAST PIPES FOR SEWERAGE ACCORDING TO EGYPTIAN STANDARDS ES 1717 / 2008 - ISO 4435 / 2003

Normal Outside Diameter DN	SN 2 SDR 51		SN 4 SDR 41		SN 8 SDR 34	
	No. Thick of wall mm	No. wt Kg/m	No. Thick of wall mm	No. wt Kg/m	No. Thick of wall mm	No. wt Kg/m
110	–		3.2	1.64	3.2	1.64
125	–		3.2	1.82	3.7	2.13
160	3.2	2.41	4	2.91	4.7	3.44
200	3.9	3.7	4.9	4.46	5.9	5.37
250	4.9	5.65	6.2	7.06	7.3	8.31
315	6.2	9.02	7.7	11.11	9.2	13.2
355	7	11.4	8.7	14.06	10.4	16.7
400	7.9	14.5	9.8	17.8	11.7	21.1
450	8.8	18.3	11	22.53	13.2	26.8
500	9.8	22.4	12.3	28	14.6	32.9
630	12.3	35.7	15.4	43.944	18.4	52.2
710	13.9	45.3	17.4	56.15	–	–
800	15.7	57.2	19.6	71	–	–

DUBAI PLAST PIPES FOR SEWERAGE ACCORDING TO ASTMD 1785 SCHEDULE 40,80

Normal Size inch	Outside diameter mm mm		Schedule(40)				Schedule(80)			
			thickness mm		Weight kg/m	Pressure rating bar	thickness mm		Weight kg/m	Pressure rating bar
	Min	Max	Min	Max			Min	Max		
1/2	21.2	21.2	2.8	3.3	0.24	41.433.1	3.7	4.2	0.31	58.6
3/4	26.6	26.9	2.9	3.4	0.33	31	3.9	4.4	0.41	47.6
1	33.4	33.7	3.4	3.9	0.48	25.5	4.6	5.1	0.6	43.4
1 1/4	42.1	42.4	3.6	4.1	0.65	22.8	4.9	5.4	0.84	35.9
1 1/2	48.1	48.4	3.7	4.2	0.77	19.3	5.1	5.7	1.03	32.4
2	60.2	60.5	3.9	4.4	1.04	17.9	5.5	6.2	1.41	27.6
3	88.7	89.1	5.5	6.2	2.14	15.2	7.6	8.5	2.88	25.5
4	114.1	114.5	6	6.7	3.05	12.4	8.6	9.6	4.22	22.1
6	168	168.5	7.1	8	5.37	11	11	12.3	8.05	19.3
8	218.8	219.4	8.2	9.2	8.11		12.7	14.2	12.23	17.2

- The length of pipe 6 meter or as requested.
- The pipes are without socket and the color is white .

DUBAI PLAST THREADED PIPES FOR SUPPLY AND IRRIGATION WATER RESSURE 9 BAR ACCORDING TO B.S 3505 .

C	Outside diameter	wall thickness	weight/meter
1/2	21.2	2.6	0.226
3/4	26.6	3	0.32
1	33.4	3.5	0.47
1 1/4	42.1	3.75	0.63
1 1/2	48.1	4.3	0.815
2	60	5.3	1.25

- Length of pipe 6 meter or as requested.

DUBAI PLAST PIPES FOR WATER SUPPLY ACCORDING TO EUROPEAN STANDARD EN 1452-2 .

NOMAINAL OUTSIDE DIAMETER DN	Nominal MIN Wall THICKNESS							
	Pipe Series S							
	S 20	S 16 7	S 16	S 12.5	S 10	S 8	S 6.3	S 5
	SDR41	SDR34,4	SDR 33	SDR 26	SDR 21	SDR 17	SDR 13.6	SDR11
	Nominal pressure PN Based ON Service(Design) Coefficient C=2.5							
		PN 6	PN 7.5	PN 8	PN 10	PN12.5	PN 16	PN 20
12		–	–	–	–	–	–	1.5
16		–	–	–	–	–	–	1.5
20		–	–	–	–	–	1.5	1.9
25		–	–	–	–	1.5	1.9	2.3
32		–	–	1.5	1.6	1.9	2.4	2.9
40		–	1.5	1.6	1.9	2.4	3	3.7
50		1.5	1.6	2	2.4	3	3.7	4.6
63		1.9	2	2.5	3	3.8	4.7	5.8
75		2.2	2.3	2.9	3.6	4.5	5.6	6.8
90		2.7	2.8	3.5	4.3	5.4	6.7	8.2
Nominal pressure PN Based ON Service(Design) Coefficient C=2 ,0tt								
	PN 6	PN 7.5	PN 8	PN 10	PN12.5	PN 16	PN 20	PN 25
110	2.7	3.2	3.4	4.2	5.3	6.6	8.1	10
125	3.1	3.7	3.9	4.8	6	7.4	9.2	11.4
140	3.5	4.1	4.3	5.4	6.7	8.3	10.3	12.7
160	4	4.7	4.9	6.2	7.7	9.5	11.8	14.6
180	4.4	5.3	5.5	6.9	8.6	10.7	13.3	16.4
200	4.9	5.9	6.2	7.7	9.6	11.9	14.7	18.2
225	5.5	6.6	6.9	8.6	10.8	13.4	16.6	–
250	6.2	7.3	7.7	9.6	11.9	14.8	18.4	–
280	6.9	8.2	8.6	10.7	13.4	16.6	20.6	–
315	7.7	9.2	9.7	12.1	15	18.7	23.2	–
355	8.7	10.4	10.9	13.6	19.9	21.2	26.1	–
400	9.8	11.7	12.3	15.3	19.1	23.7	29.4	–
450	11	13.2	13.8	17.2	21.5	26.7	33.1	–
500	12.3	14.6	15.3	19.1	23.9	29.7	36.8	–
560	13.7	16.4	17.2	21.4	26.7	–	–	–
630	15.4	18.4	19.3	24.1	30	–	–	–
710	17.4	20.7	21.8	27.2	–	–	–	–
800	19.6	23.3	24.5	30.6	–	–	–	–
900	22	26.3	27.6	–	–	–	–	–
1000	24.5	29.2	30.6	–	–	–	–	–

CEMENTED SYSTEM

PVC-U INDUSTRIAL APPLICATION

METRIC - PLAIN
METRIC - PLAIN/THREADED
IMPERIAL - PLAIN
IMPERIAL - PLAIN/THREADED



METRIC - PLAIN

PVC-U ELBOW 90°



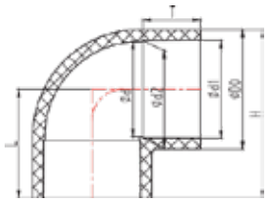

Code	D	Dimensions (mm)							Nominal Pressure PN(kg/cm²)
		D0	d1	d2	d	T	L	H	
2010100101	20	26.3	20.3	19.95	18	16.2	27.7	40.8	PN16
2010100102	25	31.8	25.3	24.95	23	18.7	32.7	48.6	PN16
2010100103	32	39.9	32.3	31.9	30	22.2	39.7	59.6	PN16
2010100104	40	49.7	40.4	39.9	38	26.2	47.7	72.5	PN16
2010100105	50	61.9	50.4	49.9	48	31.2	57.7	88.7	PN16
2010100106	63	77.9	63.4	62.9	61	37.7	70.7	109.7	PN16
2010100107	75	91	75.4	74.9	70.9	43.7	82.5	128	PN16
2010100108	90	107.4	90.5	89.9	85.9	51.2	97.5	151.2	PN16
2010100109	110	127	110.6	109.9	103.9	61.2	117.5	181.1	PN16
2010100110	125	144.3	125.7	124.9	118.9	68.7	132.5	204.7	PN16
2010100111	140	162.3	140.8	139.9	133.9	76.2	148	229.1	PN16
2010100112	160	184.6	160.8	159.9	153.5	86.2	168.5	260.8	PN16
2010100113	180	202.6	180.9	179.9	178.5	97	190	291.3	PN16
2010100114	200	230.5	201	199.9	193.5	106.2	208	323.3	PN16
2010100115	225	259.4	226.2	224.9	216.9	119.1	233.6	363.2	PN16
2010100116	250	287.9	251.3	249.9	241.9	131.65	258.5	402.5	PN16
2010100117	280	314.8	281.5	279.9	278	147	291	448.4	PN16
2010100118	315	358.2	316.7	314.9	306.9	164.3	323	502.1	PN16
2010100119	355	391	356.8	355	326	184.3	368.3	561.4	PN10
2010100120	400	442	402	400	369.8	204.2	413	629.4	PN10

PVC-U ELBOW 45°



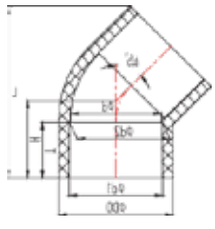

Code	D	Dimensions (mm)							Nominal Pressure PN(kg/cm²)
		D0	d1	d2	d	T	L	H	
2010100201	20	26.3	20.3	19.95	18	16.2	22.1	46.9	PN16
2010100202	25	31.8	25.3	24.95	23	18.7	25.7	54.9	PN16
2010100203	32	38.6	32.3	31.9	30	22.2	30.6	66.2	PN16
2010100204	40	49.7	40.4	39.9	38	26.2	36.3	79.3	PN16
2010100205	50	61.9	50.4	49.9	48	31.2	43.3	95.7	PN16
2010100206	63	77.5	63.4	62.9	61	37.7	52.5	116.9	PN16
2010100207	75	91.2	75.4	74.9	70.9	43.7	64.6	142.5	PN16
2010100208	90	107.6	90.5	89.9	85.9	51.2	75.6	166.9	PN16
2010100209	110	127	110.6	109.9	103.9	61.2	89.2	197.6	PN16
2010100210	125	144.3	125.7	124.9	118.9	68.7	100.7	222.9	PN16
2010100211	140	161.6	140.8	139.9	133.9	76.2	112.4	248.9	PN16
2010100212	160	184.6	160.8	159.9	153.9	86.2	126.9	281.9	PN16
2010100213	180	202.6	180.9	179.9	178.5	97	137.9	307	PN16
2010100214	200	230.5	201	199.9	193.5	106.2	157.1	349.5	PN16
2010100215	225	259.4	226.2	224.9	216.9	119.1	175.7	391.5	PN16
2010100216	250	287.9	251.3	249.9	241.9	131.65	193.3	432.2	PN16
2010100217	280	314.8	281.5	279.9	278	147	209.6	469.1	PN16
2010100218	315	358.2	316.7	314.9	306.9	164.3	242.8	541.2	PN16
2010100219	355	391	356.8	355	326	184.3	272.8	602.2	PN10
2010100220	400	442	402	400	369.8	204.2	298.5	662.2	PN10

METRIC - PLAIN

PVC-U COUPLING



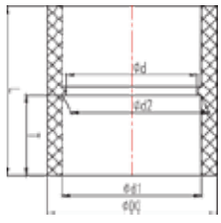

Code	D	Dimensions (mm)						Nominal Pressure PN(kg/cm²)
		D0	d1	d2	d	T	L	
2010100301	20	26.3	20.3	19.95	18	16.2	34.4	PN16
2010100302	25	31.8	25.3	24.95	23	18.7	39	PN16
2010100303	32	39.9	32.3	31.9	30	22.2	46.4	PN16
2010100304	40	49.4	40.4	39.9	38	26.2	54.4	PN16
2010100305	50	61.4	50.4	49.9	48	31.2	64.4	PN16
2010100306	63	77.1	63.4	62.9	61	37.7	77.1	PN16
2010100307	75	91	75.4	74.9	68.2	43.7	90	PN16
2010100308	90	107.6	90.5	89.9	83.8	51.2	106.4	PN16
2010100309	110	127.2	110.6	109.9	103	61.2	128.3	PN16
2010100310	125	144.3	125.7	124.9	118.6	68.7	144	PN16
2010100311	140	161.6	140.8	139.9	133.8	76.2	159.5	PN16
2010100312	160	184.6	160.8	159.9	153.8	86.2	179.7	PN16
2010100313	180	202.6	180.9	179.9	178.5	97	199	PN16
2010100314	200	230.3	201	199.9	193.5	106.2	217.5	PN16
2010100315	225	259.4	226.2	224.9	216.9	119.1	243	PN16
2010100316	250	287.9	251.3	249.9	241.9	131.65	268.3	PN16
2010100317	280	314.5	281.5	279.9	278	147	300	PN16
2010100318	315	354	316.7	314.9	306.9	164.3	335.4	PN16
2010100319	355	384.25	356.8	355	326	184.3	373.5	PN10
2010100320	400	430.15	402	400	369.8	205.5	422.8	PN10

PVC-U TEE 90°



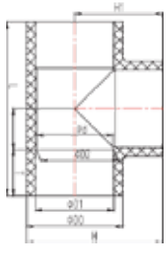

Code	D	Dimensions (mm) A								Nominal Pressure PN(kg/cm²)
		D0	d1	d2	d	T	L	H1	H	
2010100401	20	26.3	20.3	19.95	18	16.2	55.4	27.7	40.85	PN16
2010100402	25	31.8	25.3	24.95	23	18.7	65.4	32.7	48.6	PN16
2010100403	32	39.9	32.3	31.9	30	22.2	79.4	39.7	59.65	PN16
2010100404	40	49.7	40.4	39.9	38	26.2	97.2	47.7	72.55	PN16
2010100405	50	61.9	50.4	49.9	48	31.2	114.5	57.7	88.65	PN16
2010100406	63	77.9	63.4	62.9	61	37.7	141	70.7	109.65	PN16
2010100407	75	91.2	75.4	74.9	70.9	43.7	165	82.5	128.1	PN16
2010100408	90	107.6	90.5	89.9	85.9	51.2	194	97.5	151.3	PN16
2010100409	110	127	110.6	109.9	103.9	61.2	234	117.5	181	PN16
2010100410	125	144.3	125.7	124.9	118.9	68.7	264	132.5	204.65	PN16
2010100411	140	161.6	140.8	139.9	133.9	76.2	296	148	228.8	PN16
2010100412	160	184.6	160.8	159.9	153.9	86.2	334	168	260.3	PN16
2010100413	180	202.6	180.9	179.9	178.5	97	380	190	291.3	PN16
2010100414	200	230.5	201	199.9	193.5	106.2	415	208	323.25	PN16
2010100415	225	259.4	226.2	224.9	216.9	119.1	463.5	233.5	363.2	PN16
2010100416	250	287.9	251.3	249.9	241.9	131.65	516	258.5	402.45	PN16
2010100417	280	314.8	281.5	279.9	278	147	581.5	291	448.4	PN16
2010100418	315	358.2	316.7	314.9	306.9	164.3	645	323	502.1	PN16
2010100419	355	391	356.8	355	326	184.3	736	368.5	564	PN10
2010100420	400	442	402	400	369.8	204.2	825	413	634	PN10

METRIC - PLAIN

PVC-U VANSTONE FLANGE



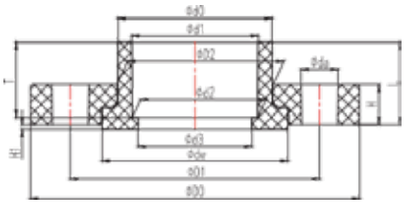

Code	D	Dimensions (mm)													Pressure Nominal
		D0	D1	D2	d0	d1	d2	d3	dw	da	T	H1	H	L	n	PN(kg/cm²)
2010100501	20	95	65	31	30.5	20.3	19.95	16	37.6	14	23.22	2.5	13	24.7	4	PN 16
2010100502	25	105	75	37.9	36.9	25.35	24.95	20.6	47	14	26.4	2.5	14	27.9	4	PN 16
2010100503	32	115	85	45.7	44.7	32.35	31.95	27	56	14	29.58	2.5	15	31.08	4	PN 16
2010100504	40	140	100	55	54	40.4	39.95	36	64	18	32.75	2.5	15	35.25	4	PN 16
2010100505	50	150	110	62.6	61.6	50.35	49.9	45	74	18	31.2	2.5	18	33.7	4	PN 16
2010100506	63	165	125	78.4	77.4	63.4	62.9	57	93	18	37.7	2.5	20	41.2	4	PN 16
2010100507	75	185	145	91.4	90.4	75.4	74.9	69	110	18	43.7	2.5	23	47.2	4	PN 16
2010100508	90	200	160	107.5	106.5	90.5	89.9	83	126	18	51.2	2.5	26	55.7	8	PN 16
2010100509	110	220	180	127.9	126.9	110.6	109.9	103	147	18	61.2	2.5	28	65.7	8	PN 16
2010100510	125	250	210	145	144	125.7	124.9	117	164	18	68.7	2.5	29	74.2	8	PN 16
2010100511	140	250	210	162.3	161.3	140.75	139.9	131.5	181	18	76.2	2.5	30	81.7	8	PN 16
2010100512	160	285	240	186.3	184.3	160.8	159.9	151	204	22	86.2	3	32	92.2	8	PN 16
2010100513	180	340	295	229	227	201	199.9	190	257.4	22	106.2	3	36	112.2	8	PN 10
2010100514	200	340	295	256.1	254.1	226.2	224.9	216	271	22	119.1	3	38	127.7	8	PN 10
2010100515	225	395	350	283.3	281.3	251.3	249.9	239.5	310	22	131.65	3.5	40	138.2	12	PN 10
2010100516	250	398	351.5	308	305.5	281.5	280.15	272	325	22	147	10	35	159	12	PN 10
2010100517	280	445	400	356.6	354.6	316.7	314.9	302	373	22	167.7	5	44	175.7	12	PN 10
2010100518	315	510	450	393	391	356.8	355	326	417	24	184.3	32	40	197	16	PN 10
2010100519	355	570	500	444	442	402	400	369.8	453	24	204.2	40	44	226	16	PN 6
2010100520	400	620	565	488.5	486	451.94	450.05	447	518	27	233	38	45	245	20	PN 6

METRIC - PLAIN

PVC-U ONE-PIECE FLANGE



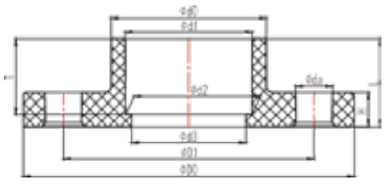

Code	D	Dimensions (mm)											Nominal Pressure
		D0	D1	d0	d1	d2	d3	da	T	H	L	n	PN(kg/cm²)
20101012201	20	95	65	26.8	20.3	19.95	16	14	16.2	12.4	20.2	4	PN16
20101012202	25	105	75	32.5	25.3	24.95	21	14	18.7	13.5	22.7	4	PN16
20101012203	32	115	85	40.3	32.3	31.9	28	14	22.2	15	26.2	4	PN16
20101012204	40	140	100	49.3	40.35	39.9	36	18	26.2	14.4	31.2	4	PN16
20101012205	50	150	110	61.6	50.35	49.9	46	18	31.2	15.5	36.2	4	PN16
20101012206	63	165	125	77.4	63.4	62.9	57	18	37.7	15.5	43.7	4	PN16
20101012207	75	185	145	90.4	75.4	74.9	69	18	43.7	17.3	50.2	4	PN16
20101012208	90	200	160	106.5	90.5	89.9	83	18	51.2	18.5	58.7	8	PN16
20101012209	110	220	180	126.9	110.6	109.9	103	18	61.2	20.3	68.7	8	PN16
20101012210	125	250	210	144	125.7	124.9	117	18	68.7	22	77.2	8	PN16
20101012211	140	250	210	161.3	140.75	139.9	131.5	18	76.2	22.2	84.7	8	PN16
20101012212	160	285	240	184.3	160.8	159.9	151	22	86.2	25	95.7	8	PN16
20101012213	180	285	240	202.6	180.8	179.9	166	22	97	25.5	115	8	PN10
20101012214	200	340	295	227	201	199.9	190	22	106.2	26.3	116.2	8	PN10
20101012215	225	340	295	254.1	226.2	224.9	216	22	119.1	27	129.7	8	PN10
20101012216	250	395	350	281.3	251.3	249.9	239.5	22	131.65	28	142.2	12	PN10
20101012217	280	405	350	310.4	281.5	279.9	264	22	147	29	169	12	PN10
20101012218	315	445	400	354.6	316.7	314.9	302	22	167.7	31.5	179.7	12	PN10

METRIC - PLAIN

PVC-U BUSHING



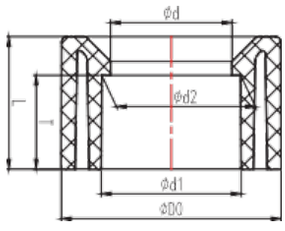

Code	D	Dimensions (mm)					
		d0	d1	d2	d	T	L
2010100601	25*20	25	20.3	19.95	16	17	19.2
2010100602	32*20	32	20.3	19.95	16	17	22.2
2010100603	32*25	32	25.3	24.95	21	19.5	22.2
2010100604	40*20	40	20.3	19.95	16	17	26.3
2010100605	40*25	40	25.3	24.95	21	19.5	26.3
2010100606	40*32	40	32.3	31.9	27.5	23	26.3
2010100607	50*20	50	20.3	19.95	16	17	31.2
2010100608	50*25	50	25.3	24.95	21	19.5	31.2
2010100609	50*32	50	32.3	31.9	27.5	23	31.2
2010100610	50*40	50	40.35	39.9	35	27	31.2
2010100611	63*20	63	20.3	19.95	16	17	38.1
2010100612	63*25	63	25.3	24.95	21	19.5	38.1
2010100613	63*32	63	32.3	31.9	27.5	23	38.1
2010100614	63*40	63	40.35	39.9	35	27	38.1
2010100615	63*50	63	50.35	49.9	45	32	38.1
2010100616	75*25	75	25.3	24.95	21	19.5	44.1
2010100617	75*32	75	32.3	31.9	27.5	23	44.1
2010100618	75*40	75	40.35	39.9	35	27	44.1
2010100619	75*50	75	50.35	49.9	45	32	44.1
2010100620	75*63	75	63.4	62.9	56	38.5	44.1
2010100621	90*32	90	32.3	31.9	27.5	23	51
2010100622	90*40	90	40.35	39.9	35	27	51
2010100623	90*50	90	50.35	49.9	45	32	51
2010100624	90*63	90	63.4	62.9	56	38.5	51
2010100625	90*75	90	75.4	74.9	67	44.5	51
2010100626	110*50	110	50.35	49.9	45	32	61

Code	D	Dimensions (mm)					
		d0	d1	d2	d	T	L
2010100627	110*63	110	63.4	62.9	56	38.5	61
2010100628	110*75	110	75.4	74.9	67	44.5	61
2010100629	110*90	110	90.5	89.9	80.5	52	61
2010100630	125*110	125	110.4	109.9	102	62	68.7
2010100631	140*63	140	63.4	62.9	102	62	77
2010100632	140*75	140	75.4	74.9	117	68.7	76.2
2010100633	140*90	140	90.5	89.9	56	38.5	76.2
2010100634	140*110	140	110.6	109.9	67	44.5	76.2
2010100635	140*125	140	125.7	124.9	80.5	52	76.2
2010100636	160*63	160	63.4	62.9	96	62	86
2010100637	160*75	160	75.4	74.9	130	77	86
2010100638	160*90	160	90.5	89.9	56	38.5	86
2010100639	160*110	160	110.6	109.9	67	44.5	86
2010100640	160*140	160	125.7	139.9	80.5	52	86
2010100641	180*160	180	160.8	159.9	150.9	86.2	96
2010100642	200*160	200	160.8	159.9	151.5	85.5	106.5
2010100643	200*180	200	180.9	179.9	169.7	96	106.2
2010100644	225*110	225	110.6	109.9	96	62	118.7
2010100645	225*140	225	140.75	139.9	130	77	118.7
2010100646	225*160	225	160.8	159.9	150.5	85.5	118.7
2010100647	225*200	225	201	199.9	188.8	106.2	118.7
2010100648	250*110	250	110.6	109.9	96	62	131.2
2010100649	250*160	250	160.8	159.9	150.5	85.5	131.2
2010100650	250*200	250	201	199.9	188.8	106.2	131.2
2010100651	250*225	250	226.2	224.9	210.8	119.1	131.2
2010100652	280*225	280	226.2	224.9	208.8	119.1	146.2

METRIC - PLAIN

REDUCING TEE



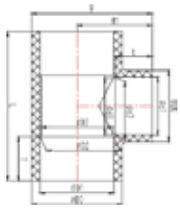

Code	D	Dimensions (mm) Nominal													Nominal Pressure PN(kg/cm²)
		D0	D1	D2	D3	d0	d1	d2	d3	T	t	H1	H	L	
2010100701	25*20	32	25	25	23	26	20	20	18	19	16	30	46	60	PN16
2010100702	32*20	40	32	32	30	27	20	20	18	22	16	34	54	69	PN16
2010100703	32*25	40	32	32	30	32	25	25	23	22	16	36	56	72	PN16
2010100704	40*20	50	40	40	38	26	20	20	18	26	16	39	64	76	PN16
2010100705	40*25	50	40	40	38	31	25	25	23	26	19	41	66	81	PN16
2010100706	40*32	50	40	40	38	40	32	32	30	26	22	44	69	87	PN16
2010100707	50*20	62	50	50	48	26	20	20	18	31	16	45	76	85	PN16
2010100708	50*25	62	50	50	48	32	25	25	23	31	19	47	78	90	PN16
2010100709	50*32	62	50	50	48	40	32	32	30	31	22	50	80	97	PN16
2010100710	50*40	62	50	50	48	49	40	40	38	31	26	53	84	65	PN16
2010100711	63*20	78	63	63	61	27	20	20	18	38	16	53	92	98	PN16
2010100712	63*25	78	63	63	61	32	25	25	23	38	19	55	94	103	PN16
2010100713	63*32	78	63	63	61	40	32	32	30	38	22	57	96	110	PN16
2010100714	63*40	78	63	63	61	50	40	40	38	38	26	59	98	118	PN16
2010100715	63*50	78	63	63	61	62	50	50	48	38	31	64	103	128	PN16
2010100716	75*20	91	75	75	71	26	20	20	18	44	16	55	101	140	PN16
2010100717	75*25	91	75	75	71	32	25	25	23	44	19	58	103	140	PN16
2010100718	75*32	91	75	75	71	40	32	32	23	44	22	61	107	140	PN16
2010100719	75*40	91	75	75	71	50	40	40	30	44	26	65	111	140	PN16
2010100720	75*50	91	75	75	71	62	50	50	48	44	31	70	116	140	PN16
2010100721	75*63	91	75	75	71	77	63	63	61	44	38	77	123	152	PN16
2010100722	90*25	108	91	90	86	32	25	25	23	51	19	65	119	168	PN16
2010100723	90*32	108	91	90	86	40	32	32	23	51	22	69	123	168	PN16
2010100724	90*40	108	91	90	86	50	40	40	38	51	26	73	127	168	PN16
2010100725	90*50	108	91	90	86	62	50	50	48	51	31	78	132	168	PN16
2010100726	90*63	108	91	90	86	77	63	63	61	51	38	84	138	168	PN16
2010100727	90*75	108	91	90	86	91	75	75	71	51	44	92	146	181	PN16
2010100728	110*25	127	111	110	104	32	25	25	23	61	19	74	138	189	PN16
2010100729	110*32	127	111	110	104	40	32	32	23	61	22	78	141	190	PN16
2010100730	110*40	127	111	110	104	50	40	40	38	61	26	82	145	191	PN16
2010100731	110*50	127	111	110	104	62	50	50	48	61	31	87	150	189	PN16
2010100732	110*63	127	111	110	104	77	63	63	61	61	38	93	157	190	PN16
2010100733	110*75	127	111	110	104	91	75	75	71	61	44	99	163	202	PN16
2010100734	110*90	127	111	110	104	108	91	90	86	61	51	110	174	215	PN16
2010100735	125*110	144	126	125	119	127	111	110	104	69	61	128	200	251	PN16
2010100736	140*50	162	141	140	134	62	50	50	48	76	31	102	183	247	PN16
2010100737	140*63	162	141	140	134	77	63	63	61	76	38	108	189	247	PN16
2010100738	140*75	162	141	140	134	91	75	75	71	76	44	114	195	248	PN16
2010100739	140*90	162	141	140	134	107	91	90	86	76	51	122	202	247	PN16
2010100740	140*110	162	141	140	134	127	111	110	104	76	61	137	218	266	PN16

METRIC - PLAIN

REDUCING TEE



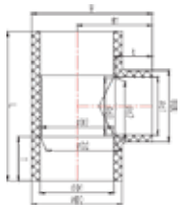

Code	D	Dimensions (mm) Nominal													Nominal Pressure PN(kg/cm²)
		D0	D1	D2	D3	d0	d1	d2	d3	T	t	H1	H	L	
2010100741	140*125	162	141	140	134	144	126	125	119	76	69	142	223	281	PN16
2010100742	160*63	185	161	160	154	78	63	63	61	86	38	118	211	286	PN16
2010100743	160*75	185	161	160	154	90	75	75	71	86	44	124	216	285	PN16
2010100744	160*90	185	161	160	154	108	91	90	86	86	51	132	224	286	PN16
2010100745	160*110	185	161	160	154	127	111	110	104	86	61	143	235	286	PN16
2010100746	160*140	185	161	160	154	162	141	140	134	86	76	162	254	316	PN16
2010100747	180*160	203	181	180	179	185	161	160	154	97	86	180	281	326	PN16
2010100748	200*90	231	201	200	194	108	91	90	86	106	51	152	267	357	PN16
2010100749	200*110	231	201	200	194	128	111	110	104	106	61	163	278	357	PN16
2010100750	200*140	231	201	200	194	162	141	140	134	106	76	178	293	357	PN16
2010100751	200*160	231	201	200	194	185	161	160	154	106	86	198	313	416	PN16
2010100752	225*63	259	226	225	217	77	63	63	61	119	38	150	279	384	PN16
2010100753	225*75	259	226	225	217	91	75	75	71	119	44	156	285	384	PN16
2010100754	225*90	259	226	225	217	108	91	90	86	119	51	163	293	384	PN16
2010100755	225*110	259	226	225	217	127	111	110	104	119	61	174	304	384	PN16
2010100756	225*140	259	226	225	217	162	141	140	134	119	76	190	319	384	PN16
2010100757	225*160	259	226	225	217	185	161	160	154	119	86	210	339	403	PN16
2010100758	225*200	259	226	225	217	231	201	200	194	119	106	232	361	384	PN16
2010100759	250*63	281	251	250	242	77	63	63	61	132	38	162	303	430	PN16
2010100760	250*75	281	251	250	242	91	75	75	71	132	44	168	308	430	PN16
2010100761	250*90	281	251	250	242	108	91	90	86	132	51	175	316	430	PN16
2010100762	250*110	281	251	250	242	127	111	110	104	132	61	186	327	430	PN16
2010100763	250*140	281	251	250	242	162	141	140	154	132	76	202	342	430	PN16
2010100764	250*160	281	251	250	242	185	161	160	179	132	86	212	352	430	PN16
2010100765	250*200	285	251	250	242	259	224	225	219	132	95	235	365	430	PN16
2010100765	250*225	288	251	250	242	259	226	225	219	132	119	254	398	430	PN16
2010100766	280*225	315	282	280	278	259	226	225	219	147	132	276	433	527	PN16
2010100767	315*90	355	317	315	307	108	91	90	86	164	51	199	376	446	PN16
2010100768	315*110	355	317	315	307	127	111	110	104	164	61	210	387	600	PN16
2010100769	315*140	355	317	315	307	162	141	140	134	164	76	225	403	600	PN16
2010100770	315*160	355	317	315	307	185	161	160	154	164	86	235	413	600	PN16
2010100771	315*200	355	317	315	307	231	201	200	194	164	106	269	446	538	PN16
2010100772	315*225	355	317	315	307	259	226	225	221	164	119	269	447	600	PN16
2010100773	315*250	355	317	315	307	289	251	250	242	164	132	282	459	644	PN16
2010100774	315*280	391	317	315	307	315	282	280	278	164	147	322	517	647	PN16
2010100775	355*200	388	357	355	326	231	201	200	194	184	106	286	478	591	PN10
2010100776	355*250	388	357	355	326	281	251	250	242	184	132	312	505	639	PN10
2010100777	355*315	388	357	400	326	344	317	315	307	184	164	351	545	693	PN10
2010100778	400*200	433	402	400	399	221	201	200	197	107	208	319	535	623	PN10
2010100779	400*250	432	402	400	399	274	251	249	247	132	208	343	559	672	PN10
2010100780	400*315	433	402	400	399	345	317	315	312	165	208	370	586	752	PN10

METRIC - PLAIN

PVC-U CAP

Code	D	Dimensions (mm)					Nominal Pressure PN(kg/cm²)
		D0	d1	d2	T	L	
2010100801	20	26.3	20.3	19.95	16.2	21.9	PN16
2010100802	25	31.8	25.3	24.95	18.7	25.7	PN16
2010100803	32	39.9	32.3	31.9	22.2	30.7	PN16
2010100804	40	49.7	40.4	39.9	26.2	36.9	PN16
2010100805	50	61.9	50.4	49.9	31.2	44.7	PN16
2010100806	63	77.9	63.4	62.9	37.7	54	PN16
2010100807	75	91.2	75.4	74.9	43.7	62.6	PN16
2010100808	90	107.6	90.5	89.9	51.2	73.3	PN16
2010100809	110	127	110.6	109.9	61.2	84.5	PN16
2010100810	125	144.3	125.7	124.9	68.7	96.1	PN16
2010100811	140	161.6	140.8	139.9	76.2	109.7	PN16
2010100812	160	184.6	160.8	159.9	86.2	126.2	PN16
2010100813	180	202.6	180.9	179.9	97	142.9	PN16
2010100814	200	230.5	201	199.9	106.2	151.1	PN16
2010100815	225	259.4	226.2	224.9	119.1	170.4	PN16
2010100816	250	287.9	251.3	249.9	131.65	186.9	PN16
2010100817	280	314.8	281.5	279.9	147	212.5	PN16
2010100818	315	358.2	316.7	314.9	164.3	234.5	PN16
2010100819	355	391	356.8	355	184.3	265	PN10
2010100820	400	442	402	400	204.2	294	PN10



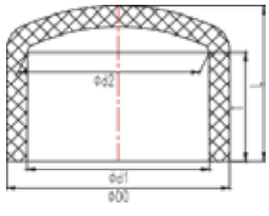

PVC-U BLIND FLANGE

Code	D	Dimensions(mm)					Nominal Pressure PN(kg/cm²)
		D0	d1	da	H	n	
2010100901	20	95	65	14	12.5	4	PN16
2010100902	25	105	75	14	13.4	4	PN16
2010100903	32	115	85	14	14	4	PN16
2010100904	40	140	100	18	14.4	4	PN16
2010100905	50	150	110	18	16.4	4	PN16
2010100906	63	165	125	18	16.2	4	PN16
2010100907	75	185	145	18	17.5	4	PN16
2010100908	90	200	160	18	18	8	PN16
2010100909	110	220	180	18	22	8	PN16
2010100910	160	285	240	22	28	8	PN16
2010100911	280	445	400	22	31.5	12	PN10
2010100912	315	510	450	24	40	16	PN10
2010100913	355	570	500	27	42	16	PN6



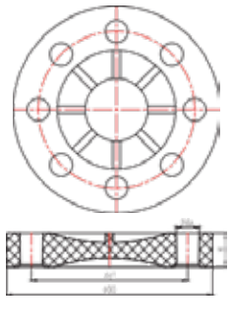

METRIC - PLAIN

PVC-U REDUCER



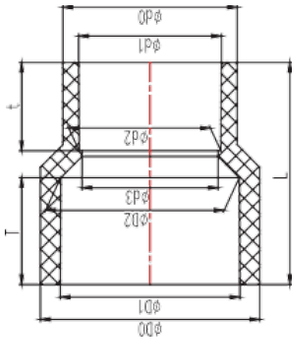

Code	D	Dimensions (mm) Nominal										Nominal Pressure
		D0	D1	D2	d0	d1	d2	d3	t	T	L	PN (kg/cm²)
2010101001	25*20	32	25	25	26	20	20	18	16	19	40	PN16
2010101002	32*20	40	32	32	26	20	20	18	16	22	49	PN16
2010101003	32*25	40	32	32	32	25	25	23	19	22	47	PN16
2010101004	40*20	49	40	40	26	20	20	18	16	26	57	PN16
2010101005	40*25	49	40	40	32	25	25	23	19	26	57	PN16
2010101006	40*32	49	40	40	40	32	32	30	22	26	55	PN16
2010101007	50*20	62	50	50	26	20	20	18	16	31	66	PN16
2010101008	50*25	62	50	50	32	25	25	23	19	31	66	PN16
2010101009	50*32	62	50	50	40	32	32	30	22	31	67	PN16
2010101010	50*40	62	50	50	50	40	40	38	26	31	65	PN16
2010101011	63*20	77	63	63	26	20	20	18	16	38	79	PN16
2010101012	63*25	77	63	63	32	25	25	23	19	38	79	PN16
2010101013	63*32	78	63	63	40	32	32	30	22	38	80	PN16
2010101014	63*40	77	63	63	50	40	40	38	26	38	80	PN16
2010101015	63*50	77	63	63	62	50	50	48	31	38	78	PN16
2010101016	75*20	91	75	75	26	20	20	18	16	44	93	PN16
2010101017	75*25	91	75	75	32	25	25	23	19	44	93	PN16
2010101018	75*32	91	75	75	40	32	32	30	22	44	94	PN16
2010101019	75*40	91	75	75	49	40	40	38	26	44	93	PN16
2010101020	75*50	91	75	75	62	50	50	48	31	44	93	PN16
2010101021	75*63	91	75	75	78	63	63	61	38	44	93	PN16
2010101022	90*25	107	91	90	32	25	25	23	19	51	108	PN16
2010101023	90*32	107	91	90	40	32	32	30	22	51	108	PN16
2010101024	90*40	107	91	90	50	40	40	38	26	51	109	PN16
2010101025	90*50	107	91	90	62	50	50	48	31	51	108	PN16
2010101026	90*63	107	91	90	77	63	63	61	38	51	108	PN16
2010101027	90*75	107	91	90	91	75	75	71	44	51	107	PN16
2010101028	110*25	127	111	110	32	25	25	23	19	61	128	PN16

Code	D	Dimensions (mm) Nominal										Nominal Pressure
		D0	D1	D2	d0	d1	d2	d3	t	T	L	PN (kg/cm²)
2010101029	110*32	127	111	110	40	32	32	30	22	61	128	PN16
2010101030	110*40	127	111	110	50	40	40	38	26	61	129	PN16
2010101031	110*50	127	111	110	62	50	50	48	31	61	128	PN16
2010101032	110*63	127	111	110	78	63	63	61	38	61	128	PN16
2010101033	110*75	127	111	110	91	75	75	71	44	61	129	PN16
2010101034	110*90	127	111	110	107	91	90	86	51	61	127	PN16
2010101035	125*110	144	126	125	127	111	110	104	61	69	143	PN16
2010101036	140*50	162	141	140	62	50	50	48	31	76	158	PN16
2010101037	140*63	162	141	140	78	63	63	61	38	76	158	PN16
2010101038	140*75	162	141	140	91	75	75	71	44	76	159	PN16
2010101039	140*90	162	141	140	78	91	90	86	52	76	158	PN16
2010101040	140*110	162	141	140	127	111	110	104	61	76	158	PN16
2010101041	140*125	162	141	140	145	126	125	119	69	76	158	PN16
2010101042	160*63	185	161	160	127	63	63	61	38	87	181	PN16
2010101043	160*75	185	161	160	91	75	75	71	44	87	179	PN16
2010101044	160*90	185	161	160	108	91	90	86	51	87	179	PN16
2010101045	160*110	185	161	160	128	111	110	104	61	87	180	PN16
2010101046	160*140	185	161	160	162	141	140	134	77	87	177	PN16
2010101047	180*160	203	181	180	180	161	160	154	87	97	202	PN16
2010101048	200*160	230	201	200	184	161	160	154	86	106	218	PN16
2010101049	225*160	259	226	225	184	161	160	154	86	119	243	PN16
2010101050	225*200	259	226	225	231	201	200	194	106	119	243	PN16
2010101051	250*200	270	235	240	240	216	215	217	115	125	260	PN16
2010101052	250*225	288	251	250	259	226	225	217	119	132	270	PN16
2010101053	280*225	315	281	280	259	226	225	217	119	147	305	PN16
2010101054	315*280	355	317	315	315	281	280	278	147	164	338	PN16
2010101055	355*315	391	357	355	355	317	315	307	164	184	384	PN10
2010101056	400*315	442	402	400	344	317	315	307	164	207	435	PN10
2010101057	400*355	442	402	400	384	357	355	326	184	207	431	PN10

METRIC - PLAIN

PVC-U CROSS



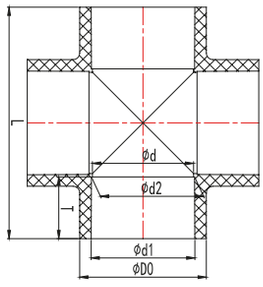

Code	D	Dimensions (mm)						Nominal Pressure PN(kg/cm²)
		D0	d1	d2	d	T	L	
2010101101	20	26.3	20.3	19.95	18	16.2	55.4	PN16
2010101102	25	31.8	25.3	24.95	21	18.7	65.4	PN16
2010101103	32	39.9	32.3	31.9	28	22.2	79.4	PN16
2010101104	40	49.5	40.35	39.9	36	26.2	95.4	PN16
2010101105	50	61.5	50.35	49.9	46	31.2	115.4	PN16
2010101106	63	77.4	63.4	62.9	59	37.7	141	PN16
2010101107	75	91.2	75.4	74.9	70.9	43.7	165	PN16
2010101108	90	107.6	90.5	89.9	85.9	51.2	194.5	PN16
2010101109	110	127	110.6	109.9	103.9	61.2	234.5	PN16
2010101110	125	144.3	125.7	124.9	118.9	68.7	263.8	PN16
2010101111	140	161.6	140.75	139.9	133.9	76.2	295	PN16
2010101112	160	185.3	160.8	159.9	153.9	86.2	336	PN16
2010101113	200	230	201	199.9	193.9	106.2	414	PN16
2010101114	225	259.4	226.2	224.9	216.9	119.1	465	PN16
2010101115	250	287.9	251.3	249.9	241.4	131.65	515.5	PN16
2010101116	280	314.8	281.2	280.1	276	147	582	PN16
2010101117	315	354	316.7	314.9	307	164.3	643	PN16

PVC-U UNION



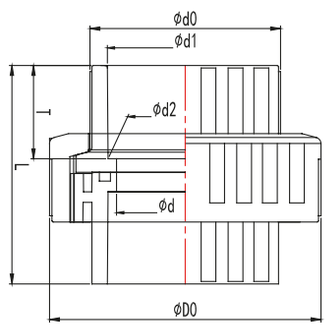

Code	D	Dimensions (mm)							Nominal Pressure PN(kg/cm²)
		D0	d0	d1	d2	d	T	L	
2010101301	20	47	26.8	20.3	19.95	15.5	16.5	41.5	PN16
2010101302	25	53.9	32	25.3	24.95	20	19	48	PN16
2010101303	32	67	40.3	32.3	31.9	26	22.5	55	PN16
2010101304	40	78.5	49.1	40.35	39.9	34	26.5	63.5	PN16
2010101305	50	93	61.6	50.35	49.9	43	31.5	75.5	PN16
2010101306	63	110.6	76	63.4	62.9	56	38	89.5	PN16
2010101307	75	130	89.6	75.4	74.9	67	44	102	PN16
2010101308	90	147.5	105.5	90.5	89.9	82	51.5	120	PN16
2010101309	110	173	126.5	110.6	109.9	102	61.5	140	PN16

METRIC- PLAIN/THREADED

PVC-U ELBOW 90



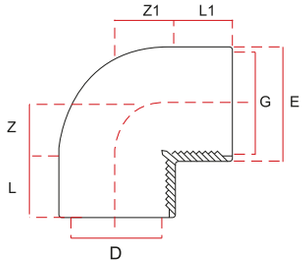

- With solvent cement socket metric and parallel female thread Rp
- Connection to plastic threads only
- Do not use thread sealing pastes that are harmful to PVC-U
- Install with low mechanical stress and avoid large cyclic temperature changes

Code	DXG	Dimensions (mm)					Nominal Pressure PN(kg/cm²)
		L	L1	Z	Z1	E	
2010200101	20 X 1/2 "	16	15	11	12	26.5	16
2010200102	25 X 3/4 "	19	16.3	14	16.7	32.5	16
2010200103	32 X 1 "	22	19.1	17	19.9	41	16
2010200104	40 X 1 1/4 "	26	21.4	23	27.6	50	16
2010200105	50 X 1 1/2 "	31	21.4	28	37.6	60	16
2010200106	63 X 2 "	38	25.7	34	46.3	75	16

PVC-U TEE 90



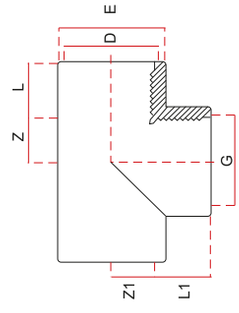

- With solvent cement socket metric and parallel female thread Rp
- Connection to plastic threads only
- Do not use thread sealing pastes that are harmful to PVC-U
- Install with low mechanical stress and avoid large cyclic temperature changes

Code	DXG	Dimensions (mm)					Nominal Pressure PN(kg/cm²)
		L	L1	Z	Z1	E	
2010200201	20 X 1/2 "	18	15	11	12	27.5	16
2010200202	25 X 3/4 "	19	16.3	14	16.7	33.5	16
2010200203	32 X 1 "	22	19.1	17	19.9	42	16
2010200204	40 X 1 1/4 "	26	21.4	21	25.6	51	16
2010200205	50 X 1 1/2 "	31	21.4	26	35.6	61	16
2010200206	63 X 2 "	38	25.7	33	45.3	75	16

METRIC- PLAIN/THREADED

PVC-U FEMALE ADAPTOR



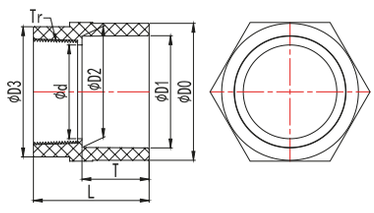

- With solvent cement socket metric and taper female thread Rp
- Connection to plastic threads only
- Do not use thread sealing pastes that are harmful to PVC-U
- Install with low mechanical stress and avoid large cyclic temperature changes

Code	D	Dimensions (mm)								Nominal Pressure PN(kg/cm²)
		D0	D1	D2	D3	d	T	L	Tr	
2010200301	20	27.1	20.3	19.95	27.6	16.5	16.5	33.5	1/2"	PN16
2010200302	25	32.5	25.3	24.95	33.6	22	19	37	3/4"	PN16
2010200303	32	40.3	32.3	31.9	41.3	28	22.5	42.2	1"	PN16
2010200304	40	49.5	40.35	39.9	51.1	36	26.5	49	1-1/4"	PN16
2010200305	50	61.6	50.35	49.9	59	42	31.5	54	1-1/2"	PN16
2010200306	63	77.4	63.4	62.9	73.6	53	38	65.5	2"	PN16
2010200307	75	90.4	75.4	74.9	90.2	68	44	76	2-1/2"	PN16
2010200308	90	106.5	90.5	89.9	107.6	80	51.5	86.5	3"	PN16
2010200309	110	126.9	110.6	109.9	129.4	104.5	61.5	103	4"	PN16

PVC-U MALE ADAPTOR



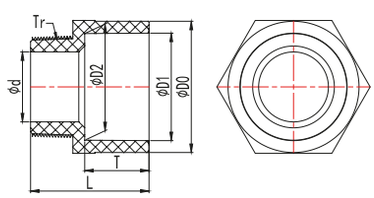

- With solvent cement socket metric and taper male thread Rp
- Do not use thread sealing pastes that are harmful to PVC-U
- Install with low mechanical stress and avoid large cyclic temperature changes

Code	D	Dimensions (mm)							Nominal Pressure PN(kg/cm²)
		D0	D1	D2	d	T	L	Tr	
2010200401	20	26.8	20.3	19.95	11.3	16.5	35	1/2"	PN16
2010200402	25	32.5	25.3	24.95	16.1	19	38.5	3/4"	PN16
2010200403	32	40.3	32.3	31.9	21.4	22.5	44.5	1"	PN16
2010200404	40	49.5	40.35	39.9	28.8	26.5	51	1-1/4"	PN16
2010200405	50	61.6	50.35	49.9	32.5	31.5	56.5	1-1/2"	PN16
2010200406	63	77	63.4	62.9	41.3	38	69.4	2"	PN16
2010200407	75	90.4	75.4	74.9	55.8	44	79.9	2-1/2"	PN16
2010200408	90	106.5	90.5	89.9	67.3	51.5	91.5	3"	PN16
2010200409	110	126.9	110.6	109.9	91.6	61.5	108	4"	PN16

METRIC - PLAIN/THREADED

PVC-U UNION WITH O-RING



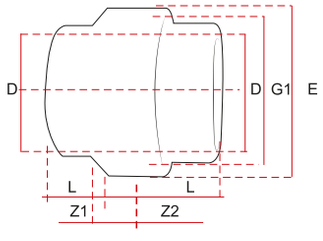

- Union end: solvent socket metric
- Union bush : parallel 'emale thread Rp
- Connecion to plasic threads only
- Do not use thread sealing pastes that are harm'ul to PVC-U

Code	DXG	Dimensions (mm)						Nominal Pressure PN(kg/cm²)
		L	L1	Z	Z2	G	E	
2010200501	20 X 1/2 "	16	15	3	11	1	42	PN16
2010200502	25 X 3/4 "	19	16.3	3	12.7	1 1/4 "	52	PN16
2010200503	32 X 1 "	22	19.1	3	12.9	1 1/2 "	59	PN16
2010200504	40 X 1 1/4 "	26	21.4	3	16.6	2 "	72	PN16
2010200505	50 X 1 1/2 "	31	21.4	3	23.6	2 1/4 "	79	PN16
2010200506	63 X 2 "	38	25.7	3	30.3	2 3/4 "	96	PN16

MEMO

IMPERIAL - PLAIN

PVC-U ELBOW 90°



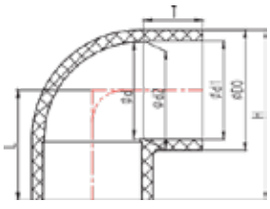

Code	Size	Dimensions (mm)							Nominal Pressure PN(kg/cm²)
		D0	d1	d2	d	T	L	H	
2020100101	1/2"	30.5	21.54	21.23	17	23.22	36.25	51.5	PN16
2020100102	3/4"	36.9	26.87	26.57	22.5	26.4	41.4	59.85	PN16
2020100103	1"	44.7	33.66	33.27	29	29.57	47.1	69.45	PN16
2020100104	1-1/4"	54	42.42	42.04	38	32.75	55.75	82.75	PN16
2020100105	1-1/2"	60.6	48.56	48.11	43	35.93	61.95	92.25	PN16
2020100106	2"	73.1	60.63	60.17	55	39.1	70.85	107.4	PN16
2020100107	2-1/2"	88.4	73.38	72.85	67.5	45.45	84.5	128.7	PN16
2020100108	3"	105.3	89.31	88.7	83	48.63	97.63	149.3	PN16
2020100109	4"	132	114.76	114.07	106	58.15	117.25	183.25	PN16
2020100110	5"	161.9	141.81	141.04	133	67.68	143.5	224.45	PN16
2020100111	6"	190.9	168.83	168	160	77.2	166.25	261.7	PN16
2020100112	8"	245.9	219.84	218.69	208	102.6	216.3	340.55	PN16
2020100113	10"	305.8	273.81	272.67	262.5	128	278	430.9	PN16

PVC-U ELBOW 45°



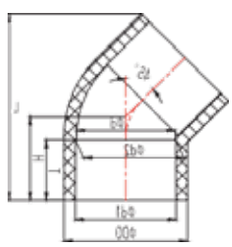

Code	Size	Dimensions (mm)						Nominal Pressure PN(kg/cm²)
		D0	d1	d2	d	T	H	
2020100201	1/2"	30.5	21.54	21.23	17	23.22	29.72	PN16
2020100202	3/4"	35.27	26.87	26.57	22.5	26.4	34.4	PN16
2020100203	1"	43.66	33.66	33.27	29	29.57	37.58	PN16
2020100204	1-1/4"	53.02	42.42	42.04	38	32.75	42.75	PN16
2020100205	1-1/2"	59.86	48.56	48.11	43	35.93	47.93	PN16
2020100206	2"	72.22	60.63	60.17	55	39.1	55.1	PN16
2020100207	2-1/2"	88	73.38	72.85	67.5	45.45	63.5	PN16
2020100208	3"	105.3	89.31	88.7	83	48.63	68.63	PN16
2020100209	4"	132	114.76	114.07	106	58.15	84.15	PN16
2020100210	5"	161.9	141.81	141.04	133	67.68	104.55	PN16
2020100211	6"	190.9	168.83	168	160	77.2	122.2	PN16
2020100212	8"	245.9	219.84	218.69	208	102.6	153.8	PN16
2020100213	10"	305.2	273.8	272.67	262.5	128	188	PN16

IMPERIAL - PLAIN

PVC-U COUPLING



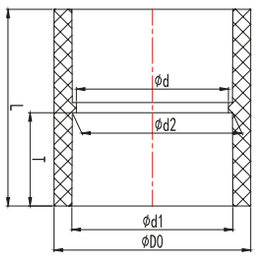

Code	Size	Dimensions (mm)						Nominal Pressure PN(kg/cm²)
		D0	d1	d2	d	T	L	
2020100301	1/2"	30.5	21.54	21.23	17	23.22	50.4	PN16
2020100302	3/4"	36.9	26.87	26.57	22.5	26.4	56.8	PN16
2020100303	1"	44.7	33.66	33.27	29	29.57	63.1	PN16
2020100304	1-1/4"	54	42.42	42.04	38	32.75	69.5	PN16
2020100305	1-1/2"	60.6	48.56	48.11	43	35.93	75.8	PN16
2020100306	2"	73.1	60.63	60.17	55	39.1	82.2	PN16
2020100307	2-1/2"	88.4	73.38	72.85	67.5	45.45	96	PN16
2020100308	3"	105.3	89.31	88.7	83	48.63	102.3	PN16
2020100309	4"	132	114.76	114.07	106	58.15	124	PN16
2020100310	5"	161.9	141.81	141.04	133	67.68	144	PN16
2020100311	6"	190.9	168.83	168	160	77.2	164.4	PN16
2020100312	8"	245.9	219.84	218.69	208	102.6	215.2	PN16
2020100313	10"	305.8	273.81	272.67	262.5	128	266	PN16

PVC-U TEE 90°



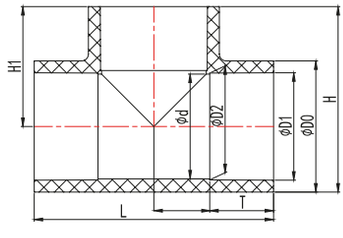

Code	Size	Dimensions (mm)								Nominal Pressure PN(kg/cm²)
		D0	d1	d2	d	T	H1	H	L	
2020100401	1/2"	30.14	21.54	21.23	17	23.22	36.25	51.5	72.5	PN16
2020100402	3/4"	35.87	26.87	26.57	22.5	26.4	41.4	59.85	82.8	PN16
2020100403	1"	44.3	33.66	33.27	29	29.57	47.1	69.45	94.2	PN16
2020100404	1-1/4"	53.42	42.42	42.04	38	32.75	55.75	82.75	111.5	PN16
2020100405	1-1/2"	60.4	48.56	48.11	43	35.93	62	92.25	124	PN16
2020100406	2"	73.1	60.63	60.17	55	39.1	70.85	107.4	141.7	PN16
2020100407	2-1/2"	88.4	73.38	72.85	67.5	45.45	83.28	128.7	166.55	PN16
2020100408	3"	105.7	89.31	88.7	83	48.63	97.08	149.3	194.15	PN16
2020100409	4"	132.5	114.76	114.07	106	58.15	117.25	183.25	234.5	PN16
2020100410	5"	161.6	141.81	141.04	133	67.68	142.8	227.95	285.6	PN16
2020100411	6"	192	168.83	168	160	77.2	166.25	261.7	332.5	PN16
2020100412	8"	246.5	219.84	218.69	208	102.6	217.6	340.55	435.2	PN16
2020100413	10"	305.8	273.81	272.67	262.5	128	278	430.9	556	PN16

IMPERIAL - PLAIN

PVC-U VANSTONE FLANGE



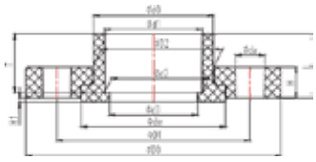

Code	Size	Dimensions(mm)														Nominal Pressure PN(kg/cm²)
		D0	D1	D2	d0	d1	d2	d3	dw	da	T	H1	H	L	n	
2020100501	1/2"	89	61	31	30.5	21.54	21.23	16	37.6	16	23.22	2.5	13	24.72	4	PN16
2020100502	3/4"	98	70	37.9	36.9	26.87	26.57	20.6	47	16	26.4	2.5	14	27.9	4	PN16
2020100503	1"	108	79	45.7	44.7	33.66	33.27	27	56	16	29.58	2.5	15	31.08	4	PN16
2020100504	1-1/4"	117	89	55	54	42.42	42.04	36	64	16	32.75	2.5	15	35.25	4	PN16
2020100505	1-1/2"	127	98	62.6	61.6	50.46	50.46	45	72.4	16	35.93	2.5	18	38.43	4	PN16
2020100506	2"	152	121	74.1	73.1	60.63	60.17	52.5	88.5	19	39.1	2.5	20	42.6	4	PN16
2020100507	2-1/2"	178	140	89.4	88.4	73.38	72.85	65	108	19	45.5	2.5	23	49	4	PN16
2020100508	3"	191	152	106.3	105.3	89.31	88.7	80	124.8	19	48.63	2.5	26	53.13	4	PN16
2020100509	4"	229	191	133	132	114.76	114.07	102	152	19	58.15	2.5	28	62.65	8	PN16
2020100510	5"	254	216	162.9	161.9	141.81	141.04	122	181.5	22	68	2.5	30	73.5	8	PN16
2020100511	6"	284	241	192.5	191.5	168.83	168	150	209.5	22	77.2	3	32	83.2	8	PN16
2020100512	8"	343	298	247.9	246.9	219.84	218.69	193	264.9	22	102.6	3	36	108.6	8	PN10
2020100513	10"	410	362	309.8	305.8	273.81	272.67	262.5	327.37	24	128	3	42	138	12	PN10

PVC-U ONE-PIECE FLANGE



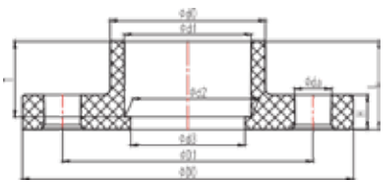

Code	Size	D	Dimensions(mm)											Nominal Pressure PN(kg/cm²)
			D0	D1	d0	d1	d2	d3	da	T	H	L	n	
2020101201	1/2"	1/2"	89	60.3	29.54	21.54	21.23	17	16	23.22	13	27.72	4	PN16
2020101202	3/4"	3/4"	89	69.85	35.27	26.87	26.57	22.5	16	26.4	14	30.9	4	PN16
2020101203	1"	1"	108	79.38	43.66	33.66	33.27	29	16	29.57	15	34.1	4	PN16
2020101204	1-1/ 4"	1-1/4"	117	88.9	53.02	42.42	42.04	38	16	32.75	15	38.75	4	PN16
2020101205	1-1/2"	1-1/2"	127	98.43	59.86	48.56	48.11	43	16	35.93	17	41.95	4	PN16
2020101206	2 "	2"	152	120.65	72.23	60.63	60.17	55	19	39.1	19	46.1	4	PN16
2020101207	2-1/2"	2-1/2"	178	139.7	88	73.38	72.85	67.5	19	45.45	20	53	4	PN16
2020101208	3"	3"	191	152.4	105.3	89.31	88.7	83	19	48.63	20.5	57.15	4	PN16
2020101209	4"	4"	229	190.5	132	114.76	114.07	106	19	58.15	21	66.65	8	PN16
2020101210	5"	5"	254	216	162	141.81	141.04	133	22	67.68	23.5	77.5	8	PN16
2020101211	6"	6"	284	241.3	190.85	168.83	168	160	22	77.2	26.5	88.2	8	PN16
2020101212	8"	8"	343	298.45	245.84	219.84	218.69	208	22	102.6	27	113.6	8	PN10

IMPERIAL - PLAIN

PVC-U BUSHING



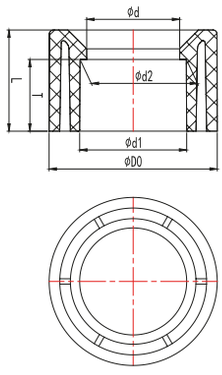

Code	Size	Dimensions (mm)						
		D0	D1	D2	D3	d0	d1	d2
2020100601	1/2"*1/4"	21.34	14.02	13.60	10.00	16.50	23.50	29.00
2020100602	1/2"*3/8"	21.34	17.45	17.04	12.00	19.50	23.50	29.00
2020100603	3/4"*1/2"	26.67	21.54	21.23	17.00	23.22	26.40	31.90
2020100604	1"*3/8"	33.40	17.45	17.04	12.00	19.50	29.58	35.58
2020100605	1"*1/2""	33.40	21.54	21.23	17.00	23.22	29.58	35.58
2020100606	1"*3/4"	33.40	26.87	26.57	22.50	26.40	29.58	35.58
2020100607	1-1/4"*1/2"	42.16	21.54	21.23	17.00	23.22	30.00	36.00
2020100608	1-1/4"*3/4"	42.16	26.87	26.57	22.50	26.40	30.00	36.00
2020100609	1-1/4"*1"	42.16	33.66	33.27	29.00	29.57	30.00	36.00
2020100610	1-1/2"*1/2"	48.26	21.54	21.23	17.00	23.22	35.93	41.93
2020100611	1-1/2"*3/4""	48.26	26.87	26.57	22.50	26.40	35.93	41.93
2020100612	1-1/2"*1"	48.26	33.66	33.27	29.00	29.57	35.93	41.93
2020100613	1-1/2"*1-1/4"	48.26	42.42	42.04	38.00	32.75	35.93	41.93
2020100614	2"*1/2"	60.33	21.54	21.23	17.00	23.22	39.10	45.10
2020100615	2"*3/4"	60.33	26.87	26.57	22.50	26.40	39.10	45.10
2020100616	2"*1"	60.33	33.66	33.27	29.00	29.57	39.10	45.10
2020100617	2"*1-1/4"	60.33	42.42	42.04	38.00	32.75	39.10	45.10
2020100618	2"*1-1/2"	60.33	48.56	48.11	43.00	35.93	39.10	45.10
2020100619	2-1/2"*1-1/2"	70.03	48.56	48.11	43.00	35.93	45.00	51.00
2020100620	2-1/2"*2"	70.03	60.63	60.17	55.00	39.10	45.00	51.00
2020100621	3"*1-1/2"	88.90	48.56	48.11	43.00	35.93	49.00	57.00
2020100622	3"*2"	88.90	60.63	60.17	55.00	39.10	49.00	57.00
2020100623	3"*2-1/2"	88.90	48.56	48.11	67.50	35.93	49.00	57.00
2020100624	4"*2"	114.30	60.63	60.17	55.00	39.10	59.00	67.00
2020100625	4"*2-1/2"	114.30	48.56	48.11	67.50	35.93	59.00	67.00
2020100626	4"*3"	114.30	89.31	88.70	83.00	48.63	59.00	67.00
2020100627	5"*4"	141.30	114.76	114.07	106.00	58.15	69.00	79.00
2020100628	6"*3"	168.30	89.31	88.70	83.00	48.63	78.00	90.00
2020100629	6"*4"	168.30	114.76	114.07	106.00	58.15	78.00	90.00
2020100630	7"*3"	168.30	141.81	141.04	133.00	67.68	78.00	90.00
2020100631	8"*4"	219.10	114.76	114.07	106.00	58.15	103.00	115.00
2020100632	8"*6"	219.10	168.83	168.00	160.00	77.20	103.00	115.00
2020100633	10"*3"	273.05	89.31	88.70	83.00	48.63	127.00	148.00
2020100634	10"*4"	273.05	114.76	114.07	106.00	58.15	127.00	148.00
2020100635	10"*6"	273.05	168.83	168.00	160.00	77.20	127.00	148.00
2020100636	10"*8"	273.05	219.84	218.69	208.00	102.60	127.00	148.00
2020100637	12"*4"	323.85	114.76	114.07	106.00	58.15	151.00	169.00
2020100638	12"*6"	323.85	168.83	168.00	160.00	77.20	151.00	169.00
2020100639	12"*8"	323.85	219.84	218.69	208.00	102.60	151.00	169.00
2020100640	12"*10"	323.85	273.81	272.67	262.50	128.00	151.00	169.00

IMPERIAL - PLAIN

PVC-U REDUCING TEE



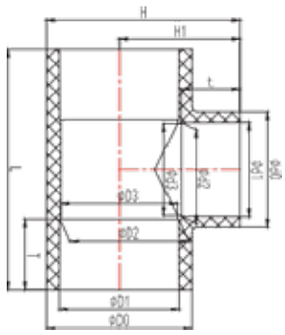

Code	Size	Dimensions mm)												Normal Pressure PN(kg/cm²)
		D0	D1	D2	D3	d0	d1	d2	d3	t	T	H	L	
2020100701	3/4"*1/2"	35.87	26.87	26.57	22.5	30.14	21.54	21.23	17	23.22	26.4	38.55	82.8	PN16
2020100702	1"*1/2"	44.3	33.66	33.27	29	30.14	21.54	21.23	17	23.22	29.57	41.75	94.2	PN16
2020100703	1"*3/4"	44.3	33.66	33.27	29	35.87	26.87	26.57	22.5	26.4	29.57	44.6	94.2	PN16
2020100704	1-1/4"*3/4"	53.42	42.42	42.04	38	35.87	26.87	26.57	22.5	26.4	32.75	49.1	111.5	PN16
2020100705	1-1/4"*1"	53.42	42.42	42.04	38	44.3	33.66	33.27	29	29.57	32.75	51.6	111.5	PN16
2020100706	1-1/2"*1"	60.4	48.56	48.11	43	44.3	33.66	33.27	29	29.57	35.93	54.35	124	PN16
2020100707	1-1/2"*1-1/4"	60.4	48.56	48.11	43	53.42	42.42	42.04	38	32.75	35.93	58.5	124	PN16
2020100708	2"*1-1/4"	73.1	60.63	60.17	55	53.42	42.42	42.04	38	32.75	39.1	64	141.7	PN16
2020100709	2"*1-1/2"	73.1	60.63	60.17	55	60.4	48.56	48.11	43	35.93	39.1	67.45	141.7	PN16
2020100710	2-1/2"*1-1/2"	88.4	73.38	72.85	67.5	60.4	48.56	48.11	43	35.93	45.45	73.7	169	PN16
2020100711	2-1/2"*2"	88.4	73.38	72.85	67.5	73.1	60.63	60.17	55	39.1	45.45	77.1	169	PN16
2020100712	3"*2"	105.7	89.31	88.7	83	73.1	60.63	60.17	55	39.1	48.63	84.6	194.15	PN16
2020100713	3"*2-1/2"	105.7	89.31	88.7	83	88.4	73.38	72.85	67.5	45.45	48.63	92	194.15	PN16
2020100714	4"*2-1/2"	132.5	114.76	114.07	106	88.4	73.38	72.85	67.5	45.45	58.15	103	234.5	PN16
2020100715	4"*3"	132.5	114.76	114.07	106	105.7	89.31	88.7	83	48.63	58.15	107.65	234.5	PN16
2020100716	5"*2"	161.6	141.81	141.04	133	72.7	60.63	60.17	55	39.1	67.68	105.1	285.6	PN16
2020100717	6"*2"	192	168.83	168	160	73.1	60.63	60.17	55	39.1	77.2	128.85	332.5	PN16
2020100718	6"*4"	192	168.83	168	160	132.5	114.76	114.07	106	58.15	77.2	144.25	332.5	PN16
2020100719	8"*4"	246.5	219.84	218.69	208	132.5	114.76	114.07	106	58.15	102.6	162.75	435.2	PN16
2020100720	8"*6"	246.5	219.84	218.69	208	192	168.83	168	160	77.2	102.6	190.25	435.2	PN16
2020100721	10"*6"	305.8	273.81	272.67	262.5	192	168.83	168	160	77.2	128	217.5	446.6	PN16
2020100722	10"*8"	305.8	273.81	272.67	262.5	246.5	219.84	218.69	208	102.6	128	245	496.5	PN16
2020100723	12"*8"	361.6	324.6	323.47	313	246.5	219.84	218.69	208	102.6	153.4	269.3	583	PN16
2020100724	12"*10"	361.6	324.6	323.47	313	305.8	273.81	272.67	262.5	128	153.4	296.8	656.8	PN16

IMPERIAL - PLAIN

PVC-U CAP



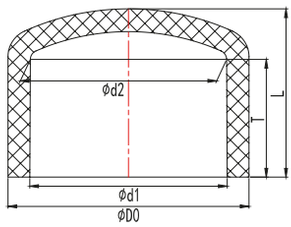

Code	Size DN	Dimensions (mm)				
		D0	d1	d2	T	L
2020100801	1/2"	29.54	21.54	21.23	23.22	30.8
2020100802	3/4"	35.31	26.87	26.57	26.4	35.13
2020100803	1"	43.7	33.66	33.27	29.57	40
2020100804	1-1/4"	53.05	42.42	42.04	32.75	45
2020100805	1-1/2"	59.86	48.56	48.11	35.93	49
2020100806	2"	72.23	60.63	60.17	39.1	53.95
2020100807	2-1/2"	87.98	73.38	72.85	45.45	64.2
2020100808	3"	105.3	89.31	88.7	48.63	58
2020100809	4"	132	114.76	114.07	58.15	81
2020100810	5"	161.8	141.81	141.04	67.68	106.5
2020100811	6"	190.85	168.83	168	77.2	119.55
2020100812	8"	245.85	219.84	218.69	102.6	141.7
2020100813	10"	305.8	273.81	272.67	128	186.25

PVC-U BLIND FLANGE



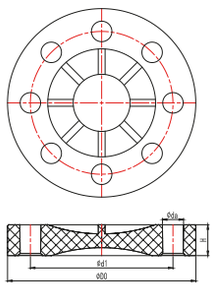

Code	Size	Dimensions (mm)						Nominal Pressure PN(kg/cm²)
		D	D0	d1	da	H	n	
2020100901	1/2"	1/2"	89	60.3	16	14.5	4	PN16
2020100902	3/4"	3/4"	89	69.85	16	15.3	4	PN16
2020100903	1"	1"	108	79.38	16	16.3	4	PN16
2020100904	1-1/4"	1-1/4"	117	88.9	16	15.8	4	PN16
2020100905	1-1/2"	1-1/2"	127	98.43	16	18.5	4	PN16
2020100906	2"	2"	152	120.65	19	20.5	4	PN16
2020100907	2-1/2"	2-1/2"	178	139.7	19	21.3	4	PN16
2020100908	3"	3"	191	152.4	19	22	4	PN16
2020100909	4"	4"	229	190.5	19	23.2	8	PN16
2020100910	5"	5"	254	216	22	25	8	PN16
2020100911	6"	6"	284	241.3	22	28.3	8	PN16
2020100912	8"	8"	343	298.45	22	28.7	8	PN10
2020100913	10"	10"	410	362	24	40	12	PN10
2020100914	12"	12"	482.6	432	24	42	12	PN10
2020100915	14"	14"	534	476.3	28.6	45	12	PN6
2020100916	16"	16"	598.35	540.8	28.6	52	16	PN6

IMPERIAL - PLAIN

PVC-U REDUCER



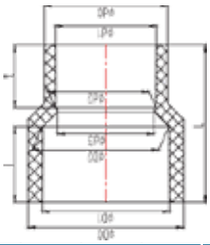

Code	Size	Dimensions(mm)										Pressure
		D0	D1	D2	d0	d1	d2	d3	t	T	L	PN(kg/cm²)
2020101001	3/4"*1/2"	36.9	26.87	26.57	30.5	21.54	21.23	17	23.22	26.4	58.6	PN16
2020101002	1"*1/2"	44.7	33.66	33.27	30.5	21.54	21.23	17	23.22	29.57	65.1	PN16
2020101003	1"*3/4"	44.7	33.66	33.27	36.9	26.87	26.57	22.5	26.4	29.57	66.3	PN16
2020101004	1-1/4"*1/2"	54	42.42	42.04	30.5	21.54	21.23	17	23.22	32.75	72.68	PN16
2020101005	1-1/4"*3/4"	54	42.42	42.04	36.9	26.87	26.57	22.5	26.4	32.75	73.8	PN16
2020101006	1-1/4"*1"	54	42.42	42.04	44.7	33.66	33.27	29	29.57	32.75	73.8	PN16
2020101007	1-1/2"*3/4"	60.6	48.56	48.11	36.9	26.87	26.57	22.5	26.4	35.93	80	PN16
2020101008	1-1/2"*1"	60.6	48.56	48.11	40.7	33.66	33.27	29	29.57	35.93	80	PN16
2020101009	1-1/2"*1-1/4"	60.6	48.56	48.11	54	42.42	42.04	38	32.75	35.93	78.7	PN16
2020101010	2"*1"	73.1	60.63	60.17	44.7	33.66	33.27	29	29.57	39.1	88.2	PN16
2020101011	2"*1-1/4"	73.1	60.63	60.17	54	42.42	42.04	38	32.75	39.1	88.2	PN16
2020101012	2"*1-1/2"	73.1	60.63	60.17	60.6	48.56	48.11	43	35.93	39.1	88.5	PN16

PVC-U CROSS



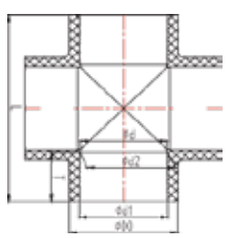

Code	Size	( )							Pressure PN(kg/cm²)
		D	D0	d1	d2	d	T	L	
2020101101	1/2"	1/2"	29.54	21.54	21.23	17	23.22	72.5	PN16
2020101102	3/4"	3/4"	35.36	26.87	26.57	22.5	26.4	82.8	PN16
2020101103	1"	1"	43.66	33.66	33.27	29	29.57	94.2	PN16
2020101104	1-1/4"	1-1/4"	53.02	42.42	42.04	38	32.75	111.5	PN16
2020101105	1-1/2"	1-1/2"	59.86	48.56	48.11	43	35.93	124	PN16
2020101106	2"	2"	72.23	60.63	60.17	55	39.1	143.7	PN16
2020101107	2-1/2"	2-1/2"	88	73.38	72.85	67.5	45.45	169	PN16
2020101108	3"	3"	105.3	89.31	88.7	83	48.63	193.26	PN16
2020101109	4"	4"	132	114.76	114.07	106	58.15	234.5	PN16
2020101110	5"	5"	162	141.81	141.04	133	67.68	287	PN16
2020101111	6"	6"	190.85	168.83	168	160	77.2	332.5	PN16

IMPERIAL - PLAIN

PVC-U UNION



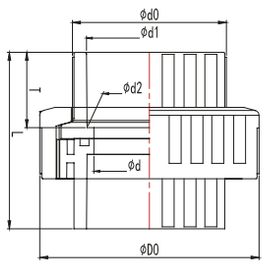

Code	Size	Dimensions (mm)								Nominal Pressure PN(kg/cm²)
		D	D0	d0	d1	d2	d	T	L	
2020101301	1/2"	1/2"	47	29.54	21.54	21.23	17	23.22	48.2	PN16
2020101302	3/4"	3/4"	54	35.36	26.87	26.57	22.5	26.4	55.5	PN16
2020101303	1"	1"	67	43.66	33.66	33.27	29	29.57	62.1	PN16
2020101304	1-1/4"	1-1/4"	78.5	53.02	42.42	42.04	38	32.75	70	PN16
2020101305	1-1/2"	1-1/2"	93	59.86	48.56	48.11	43	35.93	80	PN16
2020101306	2"	2"	110.6	72.23	60.63	60.17	55	39.1	90.5	PN16
2020101307	2-1/2"	2-1/2"	130.6	88	73.38	72.85	67.5	45.45	104	PN16
2020101308	3"	3"	148.5	105.3	89.31	88.7	83	48.63	117	PN16
2020101309	4"	4"	173.5	132	114.76	114.07	106	58.15	136.6	PN16

MEMO

IMPERIAL - PLAIN/THREADED

PVC-U ELBOW 90



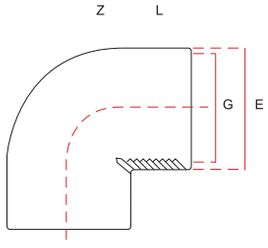

- With solvent cement socket BS inch and parallel female thread Rp
- Connection to plastic threads only
- Do not use thread sealing pastes that are harmful to PVC-U
- Install with low mechanical stress and avoid large cyclic temperature changes

Code	Size	Dimensions (mm)			Nominal Pressure PN(kg/cm²)
		L	Z	E	
2010200101	1/2 "	15	12	26.5	16
2010200102	3/4 "	16.3	16.7	32.5	16
2010200103	1 "	19.1	19.9	41	16
2010200104	1 1/4 "	21.4	27.6	50	16
2010200105	1 1/2 "	21.4	37.6	60	16
2010200106	2 "	25.7	46.3	75	16

PVC-U ELBOW 45°



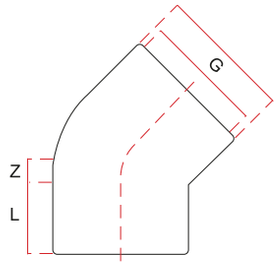

- With solvent cement socket BS inch and parallel female thread Rp
- Connection to plastic threads only
- Do not use thread sealing pastes that are harmful to PVC-U
- Install with low mechanical stress and avoid large cyclic temperature changes

Code	Size	Dimensions (mm)			Nominal Pressure PN(kg/cm²)
		L	Z	E	
2010200101	1/2 "	15	12	26.5	16
2010200102	3/4 "	16.3	16.7	32.5	16
2010200103	1 "	19.1	19.9	41	16
2010200104	1 1/4 "	21.4	27.6	50	16
2010200105	1 1/2 "	21.4	37.6	60	16
2010200106	2 "	25.7	46.3	75	16

IMPERIAL - PLAIN/THREADED

PVC-U TEE



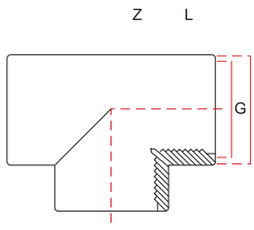

- With solvent cement socket BS inch and parallel female thread Rp
- Connection to plastic threads only
- Do not use thread sealing pastes that are harmful to PVC-U
- Install with low mechanical stress and avoid large cyclic temperature changes

Code	Size	Dimensions (mm)			Nominal Pressure PN(kg/cm²)
		L	Z	E	
2010200301	1/2 "	15	12	27	16
2010200302	3/4 "	16.3	16.7	33.5	16
2010200303	1 "	19.1	19.9	42	16
2010200304	1 1/4 "	21.4	27.6	51	16
2010200305	1 1/2 "	21.4	37.6	61	16
2010200306	2 "	25.7	46.3	75	16

PVC-U NIPPLE



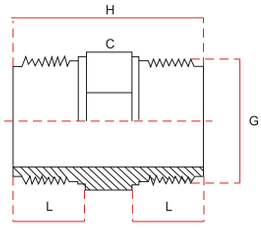

Code	Size	Dimensions (mm)			Nominal Pressure PN(kg/cm²)
		L	H	C	
2010200601	1/2 "	15	42	24	16
2010200602	3/4 "	16.3	44	30	16
2010200603	1 "	19.1	50	36	16
2010200604	1 1/4 "	21.4	58	46	16
2010200605	1 1/2 "	21.4	58	55	16
2010200606	2 "	25.7	66	65	16

IMPERIAL - PLAIN/THREADED

PVC-U FEMALE ADAPTOR



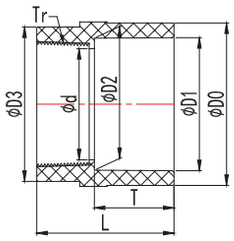

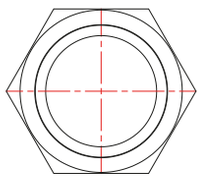

- With solvent cement socket BS inch and taper female thread Rp
- Connection to plastic threads only
- Do not use thread sealing pastes that are harmful to PVC-U
- Install with low mechanical stress and avoid large cyclic temperature changes

Code	Size	Dimensions (mm)							
		D0	D1	D2	D3	d	T	L	Tr
2010200401	1/2"	29.7	21.54	21.23	29.22	16	23.22	40.22	1/2″
2010200402	3/4"	35.3	26.87	26.57	34.97	20.6	26.4	44.4	3/4″
2010200403	1"	43.7	33.66	33.27	43.35	26	29.57	49.6	1″
2010200404	1-1/4"	53.1	42.42	42.04	52.58	36	32.75	55.25	1-1/4″
2010200405	1-1/2"	59.9	48.56	48.11	59.45	41	35.93	58.45	1-1/2″
2010200406	2"	73.1	60.63	60.17	72.1	52	39.1	66.6	2″
2010200407	2-1/2"	88	73.38	72.85	87.3	64	45.45	77.5	2-1/2″
2010200408	3"	105.3	89.31	88.7	104.6	78	48.63	83.65	3″
2010200409	4"	132	114.76	114.07	131.65	102.5	58.15	99.7	4″

PVC-U MALE ADAPTOR



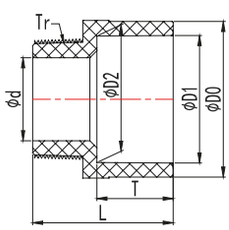

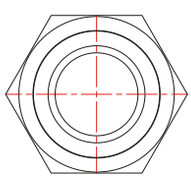

- With solvent cement socket metric and taper male thread Rp
- Do not use thread sealing pastes that are harmful to PVC-U
- Install with low mechanical stress and avoid large cyclic temperature changes

Code	Size	Dimensions (mm)							
		D	D0	D1	D2	d	T	L	Tr
2010200501	1/2"	1/2"	29.55	21.54	21.23	11.3	23.22	41.5	1/2″
2010200502	3/4"	3/4"	35.3	26.87	26.57	16	26.4	45.9	3/4″
2010200503	1"	1"	43.66	33.66	33.27	21.35	29.57	51.5	1″
2010200504	1-1/4"	1-1/4"	50	42.42	42.04	28.8	32.75	56.8	1-1/4″
2010200505	1-1/2"	1-1/2"	59.85	48.56	48.11	32.5	35.93	61.5	1-1/2″
2010200506	2"	2"	72.25	60.63	60.17	41.3	39.1	71	2″
2010200507	2-1/2"	2-1/2"	88	73.38	72.85	55.8	45.45	82	2-1/2″
2010200508	3"	3"	105.45	89.31	88.7	67.3	48.63	88.65	3″
2010200509	4"	4"	132	114.76	114.07	91.6	58.15	104.65	4″

IMPERIAL - PLAIN/THREADED

PVC-U CAP



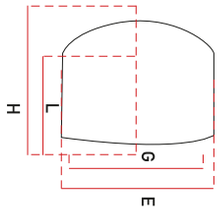

- With solvent cement socket BS inch and taper female thread Rp
- Connection to plastic threads only
- Do not use thread sealing pastes that are harmful to PVC-U
- Install with low mechanical stress and avoid large cyclic temperature changes

Code	Size	Dimensions (mm)			Nominal Pressure PN(kg/cm²)
		L	H	E	
2010200701	1/2 "	15	26	28	16
2010200702	3/4 "	16.3	28	34	16
2010200703	1 "	19.1	32	42	16
2010200704	1 1/4 "	21.4	35	51	16
2010200705	1 1/2 "	21.4	35	58	16
2010200706	2 "	25.7	39	72	16

PVC-U UNION WITH O-RING



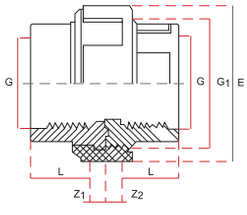

- Union end: solvent socket BS inch
- Union bush: parallel female thread Rp
- Connection to plastic threads only
- Do not use thread sealing pastes that are harmful to PVC-U

Code	Size	Dimensions (mm)						Nominal Pressure PN(kg/cm²)
		L	Z1	Z2	G1	E	O-Ring	
2010200801	1/2 "	15	4	11	1 "	42	4.081	16
2010200802	3/4 "	16.3	5.7	12.7	1 1/4 "	52	4.112	16
2010200803	1 "	19.1	5.9	12.9	1 1/2 "	59	4.131	16
2010200804	1 1/4 "	21.4	7.6	16.6	2 "	72	6.162	16
2010200805	1 1/2 "	21.4	12.6	23.6	2 1/4 "	79	6.187	16
2010200806	2 "	25.7	15.3	30.3	2 3/4 "	96	6.237	16



CEMENTED SYSTEM

PVC-U IRRIGATION APPLICATION PN 10

METRIC - PLAIN

PVC-U ELBOW 90°



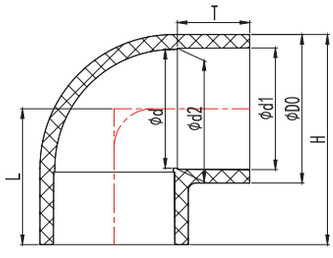

Code	Size DN	Dimensions (mm)						
		D0	d1	d2	d	T	L	H
3010100101	20	24.08	20.24	19.96	19	17	28.5	40.74
3010100102	25	30.18	25.24	24.95	24	19.5	33.5	48.59
3010100103	32	37.14	32.25	31.95	31	23	40.5	59.07
3010100104	40	46.56	40.28	39.95	39	27	48.5	71.78
3010100105	50	57.1	50.33	49.94	49	32	58.5	87.05
3010100106	63	71.18	63.34	62.93	62	38.5	71.5	107.09
3010100107	75	84.34	75.35	74.93	73.5	44.5	83.25	125.42
3010100108	90	99.1	90.38	89.93	88.5	52	98.25	147.8
3010100109	110	120.4	110.42	109.92	108	62	118	178.2
3010100110	125	135.5	125.52	124.93	123	69.5	118.5	186.25
3010100111	140	153.1	140.58	139.88	138	77	149	225.55
3010100112	160	175	160.62	159.87	158	87	169	256.5
3010100113	180	202.5	180.81	179.91	178.5	97	190	291.25
3010100114	200	219.3	200.9	199.85	197	107	211	320.65

PVC-U ELBOW 45°



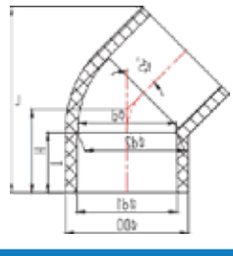

Code	Size DN	Dimensions (mm)					
		D0	d1	d2	d	T	H
3010100201	20	24.6	20.24	19.96	19	17	22.14
3010100202	25	29.84	25.24	24.95	24	19.5	25.67
3010100203	32	37.16	32.25	31.95	31	23	30.62
3010100204	40	46.48	40.28	39.95	39	27	36.28
3010100205	50	57	50.33	49.94	49	32	43.35
3010100206	63	70.38	63.34	62.93	62	38.5	52.54
3010100207	75	83.05	75.35	74.93	73.5	44.5	61.72
3010100208	90	99.28	90.38	89.93	88.5	52	72.33
3010100209	110	120.4	110.42	109.92	108	62	87.5
3010100210	125	135	125.52	124.93	123	69.5	98
3010100211	140	153.1	140.58	139.88	138	77	108.6
3010100212	160	174.52	160.62	159.87	158	87	122.7
3010100213	180	202.6	180.81	179.91	178.5	97	137.87
3010100214	200	217.4	200.9	199.85	197	107	108.4

METRIC - PLAIN

PVC-U TEE 90°





Code	Size DN	Dimensions (mm)							
		D0	d1	d2	d	T	H1	H	L
3010100301	20	24.8	20.24	19.96	19	17	28.5	40.9	57
3010100302	25	30.1	25.24	24.95	24	19.5	33.5	48.55	67
3010100303	32	37.5	32.25	31.95	31	23	40.5	59.25	81
3010100304	40	46.48	40.28	39.95	39	27	48.5	71.74	95.6
3010100305	50	57.3	50.33	49.94	49	32	58.5	87.15	117.5
3010100306	63	70.5	63.34	62.93	62	38.5	71.5	106.75	142.7
3010100307	75	84	75.35	74.93	73.5	44.5	83.25	125.25	166.5
3010100308	90	100.6	90.38	89.93	88.5	52	98.25	148.55	203
3010100309	110	120.8	110.42	109.92	108	62	118	178.4	237
3010100310	125	136.8	125.52	124.93	123	69.5	118.5	186.9	267
3010100311	140	153.5	140.58	139.88	138	77	149	225.75	298
3010100312	160	175	160.62	159.87	158	87	169	256.5	338.5
3010100313	180	202.6	180.81	179.91	178.5	97	190	291.3	379
3010100314	200	219	200.9	199.85	197	107	211	320.5	420

PVC-U COUPLING



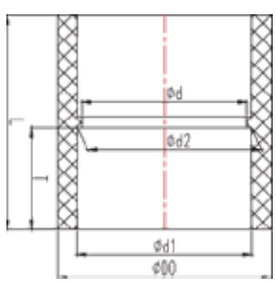

Code	Size DN	Dimensions (mm)					
		D0	d1	d2	d	T	L
3010100401	20	24.6	20.24	19.96	19	17	36
3010100402	25	29.84	25.24	24.95	24	19.5	41.3
3010100403	32	37.16	32.25	31.95	31	23	48.1
3010100404	40	46.48	40.28	39.95	39	27	56.6
3010100405	50	57	50.33	49.94	49	32	67
3010100406	63	70.38	63.34	62.93	62	38.5	81
3010100407	75	83.05	75.35	74.93	73.5	44.5	93
3010100408	90	99.28	90.38	89.93	88.5	52	107.6
3010100409	110	120.4	110.42	109.92	108	62	128.3
3010100410	125	135	125.52	124.93	123	69.5	147.2
3010100411	140	153.1	140.58	139.88	138	77	163.6
3010100412	160	174.52	160.62	159.87	158	87	183.3
3010100413	180	202.6	180.81	179.91	178.5	97	203.5
3010100414	200	217.4	200.9	199.85	197	107	217

METRIC - PLAIN

PVC-U Y Tee 45



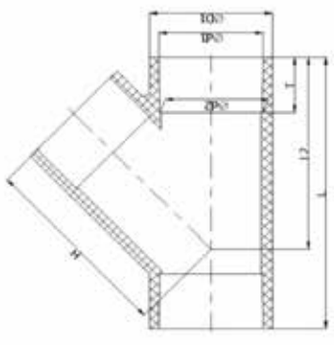

Code	Dn	Dimensions (mm))						
		D1	d1	d2	T	L	L2	H
2010101201	20	29.10	20.30	19.95	23.22	82.50	53.22	53.22
2010101202	25	34.90	25.30	24.95	26.40	97.80	62.40	62.40
2010101203	32	42.90	32.30	31.90	29.58	114.20	74.58	74.58
2010101204	40	52.00	40.40	39.90	32.75	131.50	88.75	88.75
2010101205	50	60.00	50.40	49.90	35.93	149.90	101.93	101.93
2010101206	63	75.00	63.40	62.90	39.10	177.20	124.10	124.10
2010101207	75	91.00	75.40	74.90	45.50	210.00	146.50	146.50
2010101208	90	107.00	90.50	89.90	51.20	244.50	173.20	173.20
2010101209	110	134.00	110.60	109.90	61.20	298.50	210.20	210.20
2010101210	125	168.00	410.70	139.90	76.20	376.40	266.20	266.20
2010101211	160	191.00	160.80	159.90	86.20	426.40	299.20	299.20
2010101212	200	260.00	226.20	224.90	118.70	587.40	414.70	414.70

METRIC - PLAIN

PVC-U REDUCER



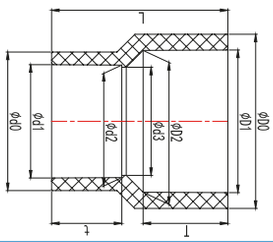

Code	Size DN	Dimensions (mm)									
		D0	D1	D2	d0	d1	d2	d3	t	T	L
3010100501	25*20	30.05	25.24	24.95	24.85	20.24	19.96	19	17	19.5	41.8
3010100502	32*20	37.4	32.25	31.95	24.85	20.24	19.96	19	17	23	48.5
3010100503	32*25	37.4	32.25	31.95	30	25.24	24.95	24	19.5	23	48.5
3010100504	40*20	46.7	40.28	39.95	26.1	20.24	19.96	19	17	27	55.1
3010100505	40*25	46.7	40.28	39.95	31.3	25.24	24.95	24	19.5	27	55.5
3010100506	40*32	46.8	40.28	39.95	38.7	32.25	31.95	31	23	27	55.2
3010100507	50*20	56.6	50.33	49.94	24.85	20.24	19.96	19	17	32	66.5
3010100508	50*25	56.8	50.33	49.94	30	32.25	31.95	24	23	32	66.5
3010100509	50*32	56.6	50.33	49.94	37.5	40.28	39.95	31	27	32	66.5
3010100510	50*40	57.2	50.33	49.94	47.1	40.28	39.95	39	27	32	66.2
3010100511	63*25	71.7	63.34	62.93	31.2	25.24	24.95	24	19.5	38.5	79.5
3010100512	63*32	72.1	63.34	62.93	38.3	32.25	31.95	31	23	38.5	79.5
3010100513	63*40	71.5	63.34	62.93	47	40.28	39.95	39	27	38.5	78.8
3010100514	63*50	83.3	63.34	62.93	57.4	50.33	49.94	49	32	38.5	80
3010100515	75*32	83.3	75.35	74.93	38	32.25	31.95	31	23	44.5	92.5
3010100516	75*40	83.3	75.35	74.93	46.2	40.28	39.95	39	27	44.5	92.5
3010100517	75*50	83.3	75.35	74.93	56.5	50.33	49.94	49	32	44.5	92.3
3010100518	75*63	83.3	75.35	74.93	70.3	63.34	62.93	62	38.5	44.5	91.8
3010100519	90*40	99.2	90.38	89.93	46	40.28	39.95	39	27	52	106.5
3010100520	90*50	99.2	90.38	89.93	56.3	50.33	49.94	49	32	52	107.5
3010100521	90*63	99.2	90.38	89.93	71	63.34	62.93	62	38.5	52	109
3010100522	90*75	99.2	90.38	89.93	84	75.35	74.93	73.5	44.5	52	107.5
3010100523	110*50	120.8	110.42	109.92	56.7	50.33	49.94	49	32	62	125.75
3010100524	110*63	120.8	110.42	109.92	70.55	63.34	62.93	62	38.5	62	125
3010100525	110*75	120.8	110.42	109.92	84.2	75.35	74.93	73.5	44.5	62	128.6
3010100526	110*90	120.8	110.42	109.92	100.3	90.38	89.93	88.5	52	62	125.78
3010100527	125*63	135.2	125.52	124.93	69.5	63.34	62.93	62	38.5	69.5	142.5
3010100528	125*75	135.2	125.52	124.93	82.7	75.35	74.93	73.5	44.5	69.5	142.5
3010100529	125*90	137.3	125.52	124.93	99.5	90.38	89.93	88.5	52	69.5	142.5
3010100530	125*110	137	125.52	124.93	121.6	110.42	109.92	108	62	69.5	142.5
3010100531	140*90	151.5	140.58	139.88	99.3	90.38	89.93	88.5	52	77	151.5
3010100532	140*110	152.6	140.58	139.88	119.6	110.42	109.92	108	62	77	157
3010100533	160*90	175.3	160.62	159.87	99.5	90.38	89.93	88.5	52	87	175.3
3010100534	160*110	175.1	160.62	159.87	121.6	110.42	109.92	108	62	87	178
3010100535	160*125	175.6	160.62	159.87	137.2	125.52	124.93	123	69.5	87	119
3010100536	160*140	175.1	160.62	159.87	152.8	140.58	139.88	138	77	87	178
3010100537	180*160	202.8	180.81	179.91	180	160.62	159.87	158	87	97	202.5
3010100538	200*110	217.9	200.9	199.85	122.6	110.42	109.92	108	62	107	218.5
3010100539	200*125	217.4	200.9	199.85	136.7	125.52	124.93	123	69.5	107	219
3010100540	200*140	218.5	200.9	199.85	153.1	140.58	139.88	138	77	107	221
3010100541	200*160	218.5	200.9	199.85	175	160.62	159.87	158	87	107	221

METRIC - PLAIN

PVC-U BRACKET



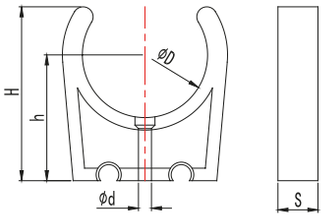

Code	Size DN	Dimensions (mm)				
		D	d	S	h	H
3010100601	20	20	4.5	12.6	29.8	38.2
3010100602	25	25	4.5	16.1	32.4	40
3010100603	32	32	4.5	19.1	35.7	46
3010100604	40	40	6	22	44	53
3010100605	50	50	6	24	51	60
3010100606	63	63	6	26	60.5	69

PVC-U CAP



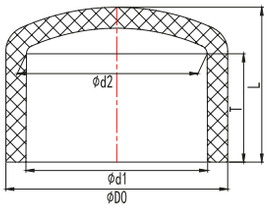

Code	Size DN	Dimensions (mm)				
		D0	D1	D2	T	L
3010100701	20	24.5	20.24	19.96	17	21.2
3010100702	25	29.8	25.24	24.95	19.5	24.8
3010100703	32	37.1	32.25	31.95	23	30
3010100704	40	45.8	40.28	39.95	27	35
3010100705	50	56.7	50.33	49.94	32	42
3010100706	63	70.3	63.34	62.93	38.5	50.4
3010100707	75	83.3	75.35	74.93	44.5	58.5
3010100708	90	100.1	90.38	89.93	52	68.3
3010100709	110	119.8	110.42	109.92	62	80
3010100710	125	136.38	125.52	124.93	69.5	91
3010100711	140	151	140.58	139.88	77	101
3010100712	160	173.5	160.62	159.87	87	116
3010100713	180	202.6	180.81	179.91	97	143
3010100714	200	220	200.9	199.85	107	150

METRIC - PLAIN

PVC-U REDUCING TEE



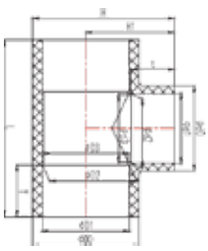

Code	Size DN	Dimensions(mm)												
		D0	D1	D2	D3	d0	d1	d2	d3	t	T	H1	H	L
30101008010	25*20	30.02	25.24	24.95	24	24.2	20.2	19.96	19	17	19.5	31	46.01	62.1
3010100802	32*20	37.44	32.25	31.95	31	25	20	19.96	19	17	23	34.5	53.22	69.2
30101008030	32*25	37.44	32.25	31.95	31	30.1	25.2	24.95	24	19.5	23	37	55.72	73.8
3010100804	40*20	46.3	40.28	39.95	39	25	20	19.96	19	17	27	38.5	61.65	77.3
30101008050	40*25	46.3	40.28	39.95	39	30.1	25.2	24.95	24	19.5	27	41	64.15	80.4
3010100806	40*32	46.3	40.28	39.95	39	37	32	31.95	29	23	27	44.5	67.65	89
3010100807.050*20		57.2	50.33	49.94	49	25.0	20.2	19.96	19	17	32	43.5	72.1	86
3010100808	50*25	57.72	50.33	49.94	49	30	25	24.95	24	19.5	32	46	74.86	92
30101008090	50*32	57.8	50.33	49.94	49	37.5	32.3	31.95	31	23	32	49.5	78.4	98.7
3010100810	50*40	57.1	50.33	49.94	49	47	40	39.95	39	27	32	53.5	82.05	108.4
30101008110	63*20	70	63.34	62.93	62	24.9	20.2	19.96	19	17	38.5	50	85	100
3010100812	63*25	70.1	63.34	62.93	62	30	25	24.95	24	19.5	38.5	52.5	87.55	105
30101008130	63*32	70.8	63.34	62.93	62	37.5	32.3	31.95	31	23	38.5	56	91.4	112
3010100814	63*40	70.3	63.34	62.93	62	46	40	39.95	39	27	38.5	60	95.15	119.85
30101008150	63*50	70.8	63.34	62.93	62	56.5	50.3	49.94	49	32	38.5	65	100.4	130.6
3010100816	75*32	84.3	75.35	74.93	73.5	38	32	31.95	31	23	44.5	61.75	103.9	125.75
30101008170	75*40	84.1	75.35	74.93	73.5	46.6	40.3	39.95	39	27	44.5	65.75	107.8	135.7
3010100818	75*50	84	75.35	74.93	73.5	57	50	49.94	49	32	44.5	70.75	112.75	153.5
30101008190	75*63	83.8	75.35	74.93	73.5	70.7	63.3	62.93	62	38.5	44.5	77.25	119.15	156.6
3010100820	90*50	100.7	90.38	89.93	88.5	57	50	49.94	49	32	52	78.25	128.6	158
30101008210	90*63	100.7	90.38	89.93	88.5	69.7	63.3	62.93	62	38.5	52	84.75	135.1	170.3
3010100822	90*75	100.70	90.38	89.93	88.50	84.10	75.35	74.93	73.50	44.50	52.00	90.75	141.10	183.00
3010100823	110*50	123.00	110.42	109.92	108.00	56.30	50.33	49.94	49.00	32.00	62.00	88.00	149.50	177.00
3010100824	110*63	122.70	110.42	109.92	108.00	74.00	63.34	62.93	62.00	38.50	62.00	94.50	155.85	190.10
3010100825	110*75	121.32	110.42	109.92	108.00	84.30	75.35	74.93	73.50	44.50	62.00	101.50	162.16	201.50
3010100826	110*90	121.50	110.42	109.92	108.00	100.60	90.38	89.93	88.50	52.00	62.00	109.00	169.75	220.40
3010100827	125*75	136.50	125.52	124.93	123.00	84.30	75.35	74.93	73.50	44.50	69.50	109.00	177.25	219.50
3010100828	125*90	137.80	125.52	124.93	123.00	99.20	90.38	89.93	88.50	52.00	69.50	116.50	185.40	232.30
3010100829	125*110	136.00	125.52	124.93	123.00	120.60	110.42	109.92	108.00	62.00	69.50	125.75	193.75	250.70
3010100830	140*110	151.50	140.58	139.88	138.00	108.70	110.42	109.92	108.00	62.00	77.00	134.00	209.75	268.00
3010100831	160*63	175.30	165.50	160.00	157.00	70.90	63.30	63.00	63.00	38.00	86.00	119.40	207.05	251.00
3010100832	160*75	175.30	165.50	160.00	157.00	84.30	75.30	75.00	72.00	44.00	86.00	125.40	213.05	251.00
3010100833	160*90	175.30	160.62	159.87	158.00	101.60	90.38	89.93	88.50	52.00	87.00	134.00	221.65	268.00
3010100834	160*110	175.40	160.62	159.87	158.00	122.30	110.42	109.92	108.00	62.00	87.00	144.00	231.70	288.00
3010100835	160*125	175.30	160.62	159.87	158.00	137.00	125.30	124.93	123.00	69.50	87.00	151.50	239.15	300.00
3010100836	160*140	175.10	160.62	159.87	158.00	153.00	140.30	139.88	138.00	77.00	87.00	159.00	246.55	318.50
3010100837	180*160	202.60	180.81	179.91	178.50	180.00	160.35	159.87	158.00	87.00	97.00	180.00	281.30	379.00
3010100838	200*75	220.90	180.81	199.85	197.00	82.74	75.35	74.93	73.50	44.50	107.00	148.50	258.95	291.50
3010100839	200*90	220.90	200.90	199.85	197.00	99.20	90.38	89.93	88.50	52.00	107.00	156.00	266.45	307.00
3010100840	200*110	219.20	200.90	199.85	197.00	122.80	110.42	109.92	108.00	62.00	107.00	166.00	275.60	328.00
3010100841	200*160	219.80	200.90	199.85	197.00	175.40	160.62	159.87	158.00	87.00	107.00	191.00	300.90	377.00

METRIC - PLAIN

PVC-U UNION



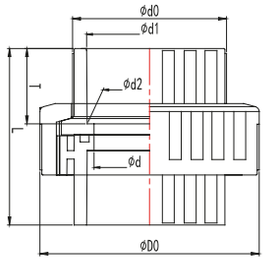

Code	Size DN	Dimensions (mm)						
		D0	d0	D1	D2	d	T	L
2010107001	20	45.5	26	20.24	19.96	19	17	53
2010107002	25	54.5	32	25.24	24.95	24	19.5	59.8
2010107003	32	65	39.5	32.25	31.95	31	23	68.5
2010107004	40	75.5	48.5	40.28	39.95	39	27	80.5
2010107005	50	88.5	59	50.33	49.94	49	32	94
2010107006	63	102	74.5	63.34	62.93	62	38.5	110
2010107007	75	122.6	86	75.35	74.93	73.5	44.5	104.7
2010107008	90	140.7	101.2	90.38	89.93	88.5	52	121.1
2010107009	110	163.6	122.2	110.42	109.92	108	62	147

PVC-U BUSHING



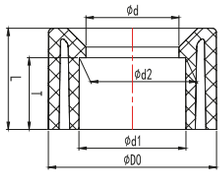

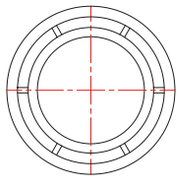

Code	Size DN	Dimensions (mm)					
		D0	d1	d2	d	T	L
3010100901	25*20	25.1	20.24	19.96	19	17	19
3010100902	32*25	32.2	25.24	24.95	24	19.5	22.2
3010100903	40*32	40.1	32.25	31.95	31	23	26.5
3010100904	50*40	50.06	40.28	39.95	39	27	30.6
3010100905	63*50	63.1	50.33	49.94	49	32	38
3010100906	75*63	75.1	63.34	62.93	62	38.5	44
3010100907	90*75	90.1	75.35	74.93	73	44.5	51
3010100908	110*90	110.1	90.38	89.93	88.5	52	60.5
3010100909	125*110	125.1	110.42	109.92	108	62	68.5
3010100910	140*110	140.1	110.42	109.92	108	62	76.7
3010100911	140*125	140.1	125.52	124.93	123	69.5	76.7
3010100912	160*110	160.1	110.42	109.92	108	62	86
3010100913	160*140	160.1	140.58	139.88	138	77	86
3010100914	180*160	180.1	160.62	159.87	158	87	96
3010100915	200*160	200.1	160.62	159.87	158	87	106
3010100916	200*180	200.1	180.81	179.91	178.5	97	106

METRIC - PLAIN/THREADED

PVC-U MALE ADAPTOR



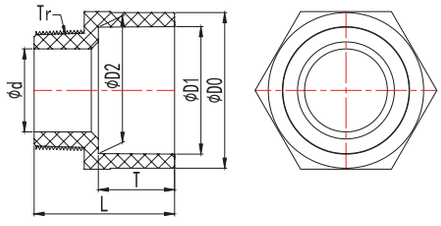

Code	Size DN	Dimensions (mm)						
		D0	D1	D2	d	T	L	Tr
3010200201	20*1/2"	26	20.24	19.96	17	17	38.5	1/2"
3010200202	25*3/4"	30.4	25.24	24.95	17.8	19.5	40.5	3/4"
3010200203	32*1"	37.5	32.25	31.95	23	23	47.5	1"
3010200204	40*1-1/4"	46.2	40.28	39.95	30.3	27	54.5	1-1/4"
3010200205	50*1-1/2"	56.8	50.33	49.94	37.6	32	63.1	1-1/2"
3010200206	63*2"	70.6	63.34	62.93	47.5	38.5	76.5	2"
3010200207	75*2-1/2"	83.6	75.35	74.93	60	44.5	87.5	2-1/2"
3010200208	90*3"	100.7	90.38	89.93	72	52	94	3"
3010200209	110*4"	121.4	110.42	109.92	95	62	119.5	4"

PVC-U FEMALE ADAPTOR



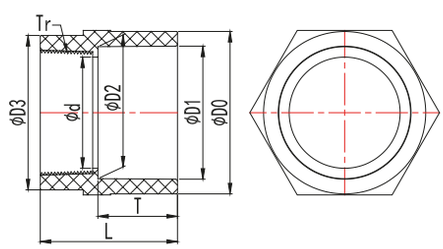

Code	Size DN	Dimensions (mm)							
		D0	D1	D2	D3	d	T	L	Tr
3010200301	20*1/2"	26.5	20.24	19.96	28	19	17	36.5	1/2"
3010200302	25*3/4"	30.5	25.24	24.95	32	24	19.5	37	3/4"
3010200303	32*1"	37.4	32.25	31.95	38	31	23	43	1"
3010200304	40*1-1/4"	46.2	40.28	39.95	47.6	39	27	50	1-1/4"
3010200305	50*1-1/2"	56.6	50.33	49.94	54	49	32	54	1-1/2"
3010200306	63*2"	70.5	63.34	62.93	57	62	38.5	64.3	2"
3010200307	75*2-1/2"	84	75.35	74.93	84	73.5	44.5	76.6	2-1/2"
3010200308	90*3"	100.6	90.38	89.93	100	88.5	52	93.4	3"
3010200309	110*4"	121.4	110.42	109.92	125.3	108	62	105.5	4"

METRIC - PLAIN/THREADED

PVC-U THREADED ELBOW 90



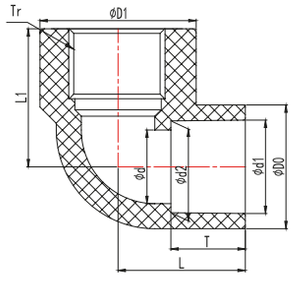

Code	Size DN	Dimensions (mm)								
		D0	D1	d1	d2	d	T	L1	L	Tr
3010200401	20*1/2"	25.8	34	20.24	19.96	18	17	32	33	1/2"
3010200402	25*3/4"	31.66	42.1	25.24	24.95	24	19.5	33	39	3/4"

PVC-U MALE ADAPTOR (T - T)



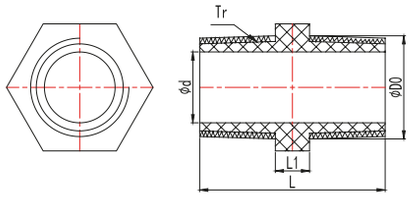

Code	Size DN	Dimensions (mm)				
		D0	d	L1	L	Tr
3010200501	20*1/2"	20.8	14.5	7	40.5	1/2"
3010200502	25*3/4"	25.7	17.5	8	45	3/4"
3010200503	32*1"	33.1	24	11	50	1"
3010200504	40*1-1/4"	41.4	32	11	52.5	1-1/4"
3010200505	50*1-1/2"	47.3	37.5	12.5	55	1-1/2"
3010200506	63*2"	58.6	48.5	12.5	67	2"

METRIC - PLAIN

PVC-U VANSTONE FLANGE

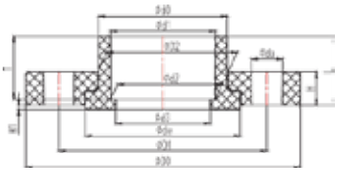



Code	Size DN	Dimensions (mm)												Number of screws
		D0	D1	D2	d0	d1	d2	d3	dw	da	T	H1	H	L	
3010101001	50	148	110	60.1	56.6	50.33	49.94	49	82	18	32	7.6	15	35	4
3010101002	63	166	125	75.2	69.6	63.34	62.93	62	93.7	18	39	8	16	42	4
3010101003	75	185	145	87	82.6	75.35	74.93	73	104	18	45	8.3	16	48	4
3010101004	90	195	160	105	99.3	90.38	89.93	89	128	18	52	11	18	55	8
3010101005	110	219	180	132	120	110.4	109.9	108	150	18	62	15	20	66	8
3010101006	125	248	210	145	137	125.5	124.9	123	164	18	70	16	19	74	8
3010101007	140	249	210	153	152	140.6	139.9	138	168	18	77	13	21	83	8
3010101008	160	284	240	187	178	160.6	159.9	158	261	22	87	20	26	91	8
3010101009	200	340	295	231	221	200.9	199.9	197	259	22	107	20	30	113	8

PVC-U ONE-PIECE FLANGE

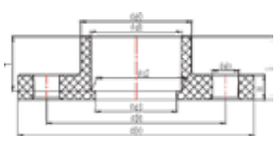



Code	Size DN	Dimensions (mm)										Number of screws
		D0	D1	d0	d1	d2	d3	da	T	H	L	
3010101101	20	94	65	28.3	20.2	19.96	19	14	17	14.5	24.5	4
3010101102	25	104	75	33.2	25.2	24.95	24	14	19.5	14.5	24.8	4
3010101103	32	114	85	41.6	32.3	31.95	31	14	23	13.5	23.3	4
3010101104	40	133.5	100	49.6	40.3	39.95	39	18	27	17.2	36	4
3010101105	50	148	110	57.4	50.3	49.94	49	18	32	15.7	46.5	4
3010101106	63	164	125	71.4	63.3	62.93	62	18	38.5	17	48.5	4
3010101107	75	183.4	145	86.8	75.4	74.93	73	18	44.5	19.3	61.5	4
3010101108	90	198.5	160	101.3	90.4	89.93	89	18	52	19.5	70	8
3010101109	110	218.2	180	123.2	110	109.92	108	18	62	19.1	80	8
3010101110	140	249	210	152.8	141	139.88	138	18	77	20	87	8
3010101111	160	283.5	240	176.2	161	159.87	158	22	87	22	105	8
3010101112	180	284	240	202.6	181	179.91	179	22	97	25.3	114	8
3010101113	200	340.5	295	219.4	201	199.85	197	22	107	25.5	128.5	8

PVC-U COPPER THEADED BLIND FLANGE



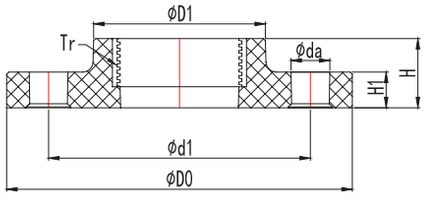

Code	Size DN	Dimensions (mm)							
		D0	D1	d1	da	H1	H	Tr	Number of screws
3030100101	110*2"	219	82	178	18	21.5	39.5	2"	8
3030100102	160*2"	283	82	238	22	25	38	2"	8
3030100103	200*2"	340	84	293	22	30	48	2"	8

PVC-U BLIND FLANGE



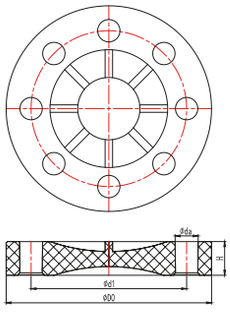

Code	Size DN	Dimensions (mm)				
		D0	d1	da	H	Number of screws
3010101201	20	95	65	14	12.5	4
3010101202	25	105	75	14	13.4	4
3010101203	32	115	85	14	14	4
3010101204	40	140	100	18	14.4	4
3010101205	50	150	110	18	16.4	4
3010101206	63	165	125	18	16.2	4
3010101207	75	185	145	18	17.5	4
3010101208	90	200	160	18	18	8
3010101209	110	219	178	18	21.5	8
3010101210	160	283	238	22	25	8
3010101211	200	340	293	22	30	8

PVC-U COPPER THREADED REDUCER



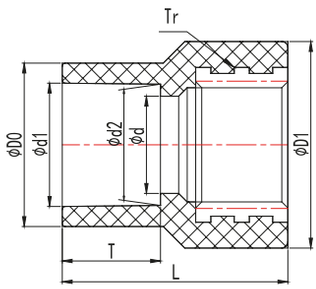

Code	Size DN	Dimensions (mm)							
		D0	D1	d1	d2	d	T	L	Tr
3030100201	20*-1/2"	24.3	32	20.24	19.96	18	17	36.7	1/2"
3030100202	25*1/2"	31	33	25.24	24.95	18.8	19.5	39.2	1/2"
3030100203	25*3/4"	29.8	38.1	25.24	24.95	18.8	19.5	39.5	3/4"
3030100204	32*1/2"	37.3	32	32.25	31.95	18.8	23	48.5	1/2"
3030100205	32*3/4"	37.5	37.5	32.25	31.95	24	23	48.5	3/4"
3030100206	32*1"	38	46.4	32.25	31.95	31	23	42.4	1"

PVC-U COPPER THREADED ELBOW 90



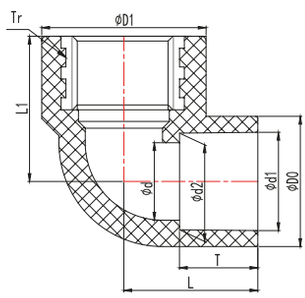

Code	Size DN	Dimensions (mm)								
		D0	D1	d1	d2	d	T	L1	L	Tr
3030100301	20*1/2"	24.7	32	20.24	19.96	18	17	30.8	28.5	1/2"
3030100302	25*1/2"	29.7	32	25.24	24.95	24	19.5	33.15	33	1/2"
3030100303	25*3/4"	29.7	37.1	25.24	24.95	24	19.5	33.15	34.84	3/4"
3030100304	32*1/2"	37.3	32	32.25	31.95	18.8	23	39.35	42	1/2"
3030100305	32*3/4"	37.3	37	32.25	31.95	24	23	45.35	42.5	3/4"
3030100306	32*1"	37.3	44.3	32.25	31.95	31	23	41.35	39.85	1"

PVC-U COPPER THREADED TEE



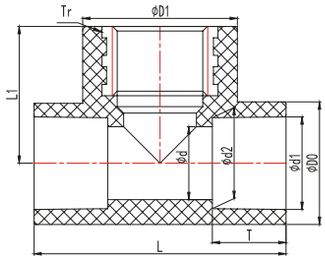

Code	Size DN	Dimensions (mm)							
		D0	D1	d1	d2	T	L1	L	Tr
3030100401	20*1/2"	24.5	32	20.24	19.96	17	32	58	1/2"
3030100402	25*1/2"	29.5	32	25.24	24.95	19.5	35	60.3	1/2"
3030100403	25*3/4"	30	38.1	25.24	24.95	19.5	38	60.7	3/4"
3030100404	32*1/2"	37	32	32.25	31.95	23	38	67.6	1/2"
3030100405	32*3/4"	38	38	32.25	31.95	23	38	74.1	3/4"
3030100406	32*1"	37.7	44	32.25	31.95	23	40	81	1"
3030100407	63*3/4"	70	38	63.34	62.93	38.5	53	105.7	3/4"
3030100408	63*1"	70	44	63.34	32.93	38.5	56	112	1"

PVC-U COPPER THREADED CAP



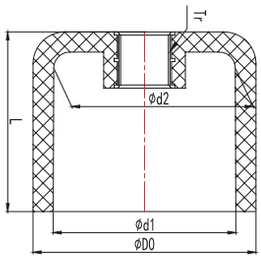

Code	Size DN	Dimensions (mm)				
		D0	d1	d2	L	Tr
3030100501	63*3/4"	70.5	63.34	62.93	56	3/4"
3030100502	63*1"	70.5	63.34	62.93	56	1"

METRIC - PLAIN

PVC-U REPAIRED COUPLING



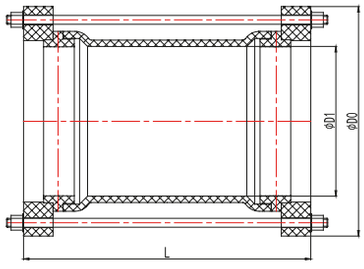

Code	Size DN	Dimensions (mm)		
		D0	D1	L
3040100101	110	218.5	110.42	303
3040100102	160	285	160.62	350
3040100103	200	340	200.9	435

PVC-U SADDLED REPAIRED COUPLING



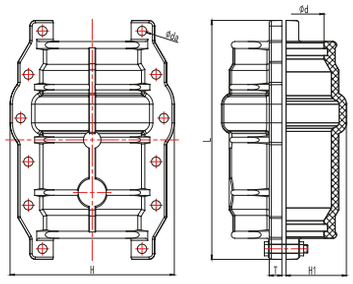

Code	Size DN	Dimensions (mm)						
		d	d1	H1	H	T	L	Number of screws
3040100201	63	65	11.5	52	155	15	250	12
3040100202	75	77	11.5	62	172.1	16	280	12
3040100203	90	92	13.5	71.5	205	18	320	12
3040100204	110	112	13.5	86	234	18	340	12
3040100205	125	128	13.5	96	257	20	360	12
3040100206	140	142	13.5	102.34	260.82	20	338	14
3040100207	160	162	13.5	119.5	299	20	380	14
3040100208	180	182	13.5	132	332.3	22	432	16
3040100209	200	202	13.5	150.4	349.7	22	460	18

METRIC - PLAIN

PVC-U SADDDLE CLAMP



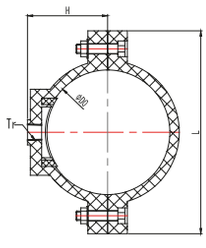

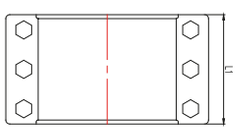

Code	Size DN	Dimensions (mm)				
		D0	H	L	L1	Tr
3040100301	63*1"	63	65.3	138.5	89.3	1"
3040100302	75*1"	75	63.5	143.5	89.3	1"
3040100303	75*1-1/2"	75	63.5	143.5	89.3	1-1/2"
3040100304	90*1/2"	90	74	159.7	68	1/2"
3040100305	90*3/4"	90	74	159.7	68	3/4"
3040100306	90*1"	90	74	159.7	68	1"
3040100307	90*1-1/2"	90	74	159.7	89.5	1-1/2"
3040100308	110*1/2"	110	78	198	109.5	1/2"
3040100309	110*3/4"	110	78	200	109.5	3/4"
3040100310	110*1"	110	81	198	109.5	1"
3040100311	110*1-1/2"	110	91	199	108	1-1/2"
3040100312	110*2"	110	91	198	109.5	2"
3040100313	110*2-1/2"	110	91	198	109.5	2-1/2"
3040100314	125*1-1/2"	125	99	225	110	1-1/2"
3040100315	125*2"	125	99	225	110	2"
3040100316	125*2-1/2"	125	99	225	110	2-1/2"
3040100317	160*1/2"	160	104.5	253	120	1/2"
3040100318	160*3/4"	160	104.5	253	120	3/4"
3040100319	160*1"	160	104.5	253	120	1"
3040100320	160*1-1/2"	160	118.5	253	120	1-1/2"
3040100321	160*2"	160	114	253	120	2"
3040100322	160*2-1/2"	160	118.5	253	120	2-1/2"
3040100323	200*1-1/2"	200	135	317	130	1-1/2"
3040100324	200*2"	200	138	317	130	2"
3040100325	200*2-1/2"	200	140	317	130	2-1/2"
3040100326	225*1-1/2"	225	150	335	140	1-1/2"
3040100327	225*2"	225	152	335	140	2"
3040100328	225*2-1/2"	225	168	335	140	2-1/2"
3040100329	250*2"	250	170	351	141	2"
3040100330	250*2-1/2"	250	170	351	141	2-1/2"
3040100331	250*3"	250	170	351	141	3"
3040100332	315*110	315	240	467	160	
3040100333	315*160	315	247	467	238	
3040100334	315*2"	315	200	472	158	2"
3040100335	315*3"	315	205	472	158	3"
3040100336	315*4"	315	205	472	158	4"
3040100337	400*200	400	320	545	275	

PVC-U COMPRESSION COUPLING



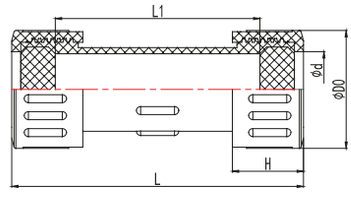

Code	Size DN	Dimensions (mm)				
		D0	d	H	L1	L
3040100401	20	44.5	20.6	30	100	123
3040100402	25	49	25.5	31	111.5	131
3040100403	32	57.5	33	34.5	115	140
3040100404	40	72.3	40.6	37	120	148
3040100405	50	77	51	40	132	165
3040100406	63	91.6	69	47	153	190
3040100407	75	105.5	76	47	183	210
3040100408	90	132	92	55	210	258
3040100409	110	158	112.5	62	230	290
3040100410	125	183	125.75	52	184.5	290
3040100411	160	219	161	59	248.5	283

CUSTOM FABRICATION FITTINGS



Our custom fabrication of pvc fittings will meet or exceed your particular standard or specification (Upon Your Request) with regards to materials and workmanship.

Each component will be manufactured to any applicable DIN or ASTM Standard that pertains to piping materials, solvent cements, solvent cement joints, gasket material, pipe threads, flange or bolt hole patterns, or any other applicable standard that may apply to your individual design.

PUSH FIT SYSTEM

PVC-U WITH RUBBER RING

This Product is Vailable in PN10 and PN16 .

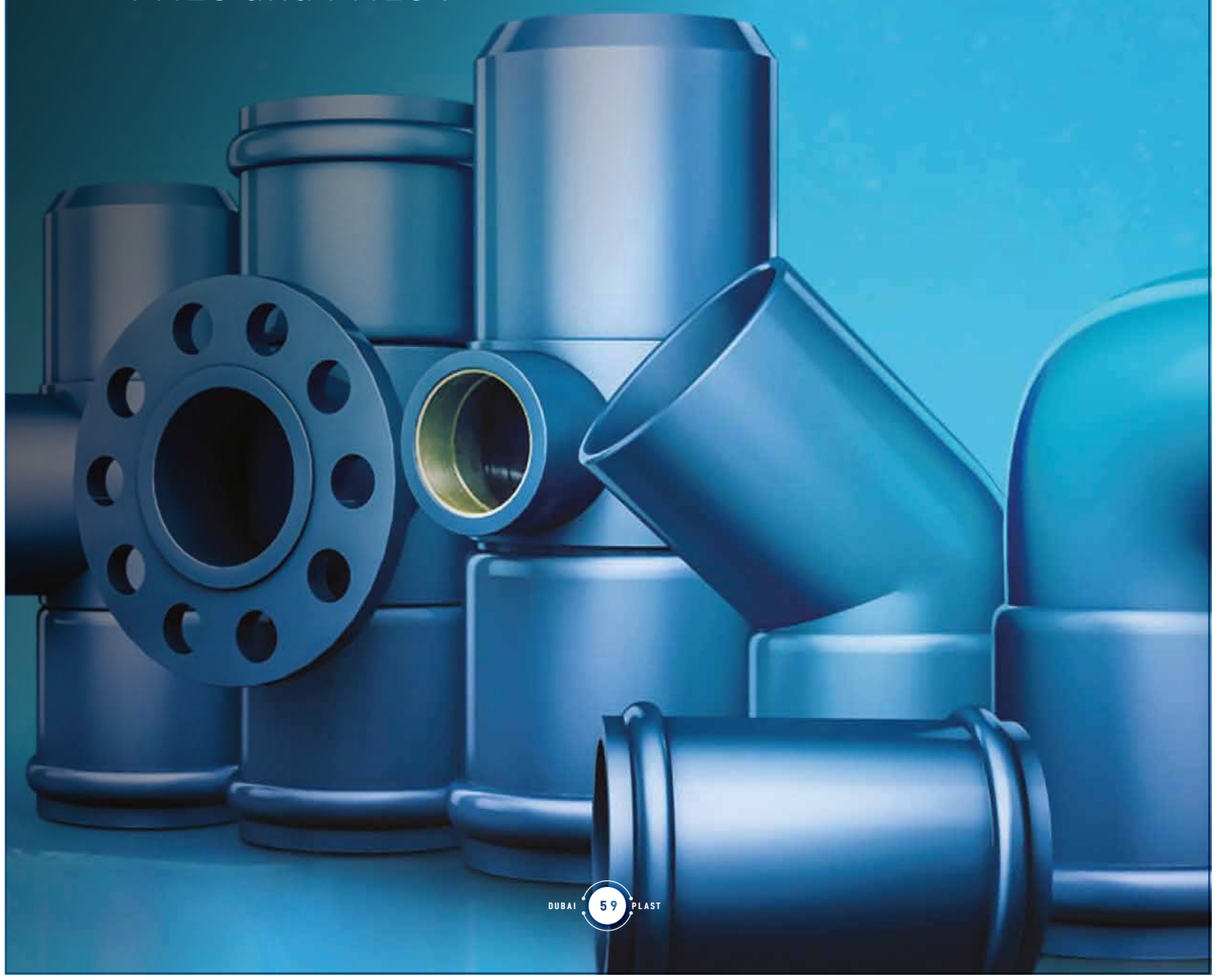

PVC-U ELBOW 90° (F/S)



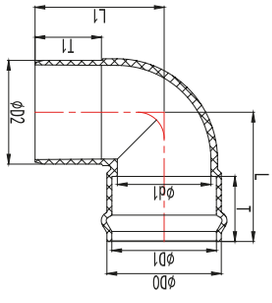

Code	Size DN	Dimensions (mm)							
		D0	D1	D2	d1	T1	T	L1	L
4050010101	200	225.00	202.50	200.20	197.00	223.00	152.00	285.00	270.00
4050010102	225	251.50	227.50	225.30	221.00	212.00	139.00	304.00	288.00
4050010103	250	276.50	252.30	250.30	247.00	252.00	152.00	328.00	312.00
4050010104	315	347.80	318.30	315.20	312.00	291.30	198.00	393.00	393.00

PVC-U ELBOW 45° (F/S)



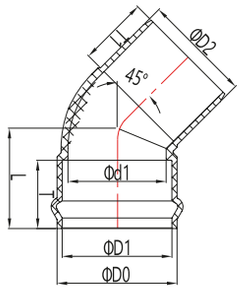

Code	Size DN	Dimensions (mm)						
		D0	D1	D2	d1	T1	T	L
4050010201	200	225.00	202.50	202.00	197.00	223.00	152.00	202.00
4050010202	225	251.50	227.50	225.30	221.00	212.00	139.00	196.00
4050010203	250	276.50	252.30	250.30	247.00	252.00	152.00	236.00
4050010204	315	347.80	318.30	315.20	312.00	291.30	198.00	291.30

PVC-U ELBOW 22.5° (F/S)



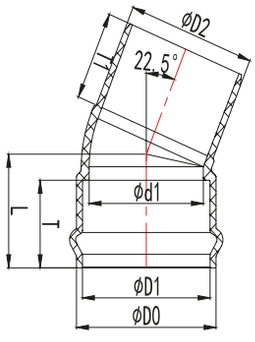

Code	Size DN	Dimensions (mm)						
		D0	D1	D2	d1	T1	T	
4050010301	225	251.50	227.50	225.30	221.00	212.00	139.00	196.00
4050010302	250	276.50	252.30	250.30	247.00	228.00	152.00	212.00
4050010303	315	347.80	318.30	315.20	312.00	257.00	198.00	257.00

PVC-U PVC-U ELBOW 90° (F/F)



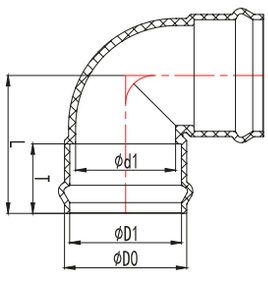

Code	Size DN	Dimensions (mm)				
		D0	D1	d1	T	L
4050010401	63	74.50	65.30	62.00	76.00	110.00
4050010402	75	88.50	77.50	73.50	84.50	125.75
4050010403	90	105.50	92.50	88.50	95.00	142.50
4050010404	110	125.70	111.50	108.00	122.00	188.50
4050010405	160	181.50	162.30	158.00	141.00	236.50
4050010406	200	225.00	202.50	197.00	152.00	270.00
4050010407	225	251.50	227.50	221.00	139.00	288.00
4050010408	250	276.50	252.30	247.00	152.00	312.00
4050010409	315	347.80	318.30	312.00	198.00	393.00
4050010410	355	388.50	356.63	326.00	235.00	410.00

PVC-U ELBOW 45° (F/F)



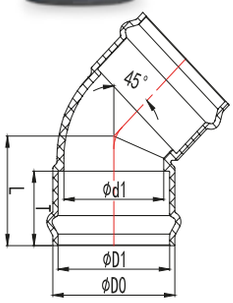

Code	Size DN	Dimensions ( )				
		D0	D1			
4050010501	63	74.50	65.30	62.00	76.00	96.00
4050010502	75	88.50	77.50	73.50	84.50	110.00
4050010503	90	105.50	92.50	88.50	95.00	122.50
4050010504	110	125.70	111.50	108.00	122.00	152.00
4050010505	160	181.50	162.30	158.00	141.00	183.50
4050010506	200	225.00	202.50	197.00	152.00	203.00
4050010507	225	251.50	227.50	221.00	139.00	217.00
4050010508	250	276.50	252.30	247.00	152.00	236.00
4050010509	315	347.80	318.30	312.00	198.00	291.00
4050010510	355	388.50	356.63	326.00	235.00	315.00

PVC-U ELBOW 22.5° (F/F)



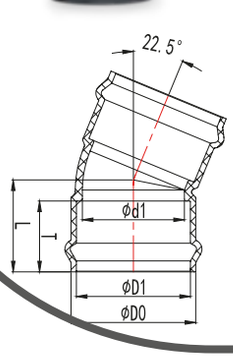

Code	Size DN	Dimensions (mm)				
		D0	D1	d1	T	L
4050010601	63	74.50	65.30	62.00	76.00	94.50
4050010602	75	88.50	77.50	73.50	84.50	106.00
4050010603	90	105.50	92.50	88.50	95.00	110.00
4050010604	110	125.70	111.50	108.00	122.00	152.00
4050010605	160	181.50	162.30	158.00	141.00	168.00
4050010606	200	225.00	202.50	197.00	152.00	178.50
4050010607	225	251.50	227.50	221.00	139.00	196.00
4050010608	250	276.50	252.30	247.00	152.00	212.00
4050010609	315	347.80	318.30	312.00	198.00	257.00

PVC-U TEE (F/F/F)

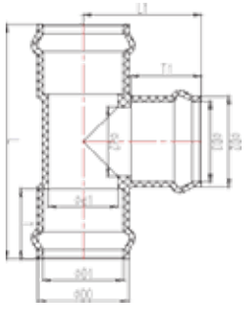



Code	Size DN	Dimensions (mm)									
		D0	D1	D2	d1	d2	D3	T1	T	L1	L
4050010701	63	74.50	65.30	74.50	62	62	65.3	76.00	76.00	110.00	220.00
4050010702	75	88.50	77.50	88.50	73.5	73.5	77.5	84.50	84.50	125.00	255.00
4050010703	90	105.50	92.50	105.50	88.5	88.5	92.5	95.00	95.00	142.50	285.00
4050010704	110	125.70	111.50	125.70	108	108	111.5	122.00	122.00	202.50	404.00
4050010705	160	181.50	162.30	181.50	158	158	162.3	141.00	141.00	236.50	470.00
4050010706	200	225.00	202.50	225.00	197	197	202.5	152.00	152.00	270.00	555.00
4050010707	225	251.50	227.50	251.50	221	221	227.5	139.00	139.00	288.00	592.00
4050010708	250	276.50	252.30	276.50	247	247	252.3	152.00	152.00	312.00	640.00
4050010709	315	347.80	318.30	347.80	312	312	318.3	198.00	198.00	393.00	786.00
4050010710	355	389.00	318.30	389.00	326	326	318.3	198.00	198.00	410.00	820.00
4050010711	75*63	88.50	77.50	74.50	73.5	62	65.3	76.00	84.50	115.00	243.00
4050010712	90*63	105.50	92.50	74.50	88.5	62	65.3	76.00	95.00	121.40	262.20
4050010713	90*75	105.50	92.50	88.50	88.5	73.5	77.5	84.50	95.00	132.90	272.20
4050010714	110 *63	125.70	111.50	74.50	108	62	65.3	76.00	122.00	150.00	405.00
4050010715	110 *75	125.70	111.50	88.50	108	73.5	77.5	84.50	122.00	159.50	405.00
4050010716	110 *90	125.70	111.50	105.50	108	88.5	92.5	95.00	122.00	170.00	405.00
4050010717	160 *63	181.50	162.30	74.50	158	62	65.3	76.00	141.00	175.00	446.00
4050010718	160 *75	181.50	162.30	88.50	158	73.5	77.5	84.50	141.00	185.00	446.00
4050010719	160 *90	181.50	162.30	105.50	158	88.5	92.5	95.00	141.00	195.00	446.00
4050010720	160 *110	181.50	162.30	125.70	158	108	111.5	122.00	141.00	220.00	446.00
4050010721	200*63	225.00	202.50	74.50	197	62	65.3	76.00	152.00	195.00	490.00
4050010722	200*75	225.00	202.50	88.50	197	73.5	77.5	84.50	152.00	205.00	490.00
4050010723	200*90	225.00	202.50	105.50	197	88.5	92.5	95.00	152.00	215.00	490.00
4050010724	200*110	225.00	202.50	125.70	197	108	111.5	122.00	152.00	240.00	490.00
4050010725	200*160	225.00	202.50	182.00	197	158	162.3	141.00	152.00	250.00	500.00
4050010726	225*110	251.50	227.50	125.70	221	108	111.5	122.00	139.00	263.00	466.00
4050010727	225*160	251.50	227.50	182.00	221	158	162.3	141.00	139.00	290.00	504.00
4050010728	250*110	276.50	252.30	125.70	247	108	111.5	122.00	152.00	275.00	500.00
4050010729	250*160	276.50	252.30	182.00	247	158	162.3	141.00	152.00	302.00	638.00
4050010730	250*200	276.50	252.30	225.00	247	197	202.5	152.00	152.00	310.00	578.00
4050010731	250*225	276.50	252.30	251.50	226	216	227.5	150.00	152.00	315.00	626.00
4050010732	315 *110	347.80	318.30	125.70	312	108	111.5	122.00	198.00	317.00	592.00
4050010733	315 *160	347.80	318.30	182.00	312	158	162.3	141.00	198.00	336.50	626.00
4050010734	315 *200	347.80	318.30	225.00	312	197	202.5	152.00	198.00	347.00	660.00
4050010735	315 *225	347.80	318.30	251.50	312	221	227.5	139.00	198.00	340.00	735.00
4050010737	315 *250	347.80	318.30	276.50	312	247	252.3	152.00	198.00	347.00	735.00
4050010738	355*160	389.00	318.30	182.00	326	158	162.3	141.00	198.00	347.50	635.00
4050010739	355*200	389.00	318.30	225.00	326	197	202.5	152.00	198.00	360.00	730.00
4050010740	355*225	389.00	318.30	251.50	326	221	227.5	139.00	198.00	354.00	730.00
4050010741	355*250	389.00	318.30	276.50	326	247	252.3	152.00	198.00	369.00	730.00
4050010742	355*315	389.00	318.30	347.80	326	312	318.3	198.00	198.00	418.00	820.00

PVC-U TEE (F/F/S)



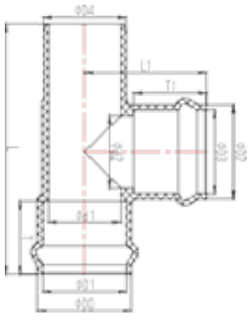

Code	Size DN	Dimensions (mm)										
		D0	D1	D2	D3	D4	d1	d2	T1	T	L1	L
4050010801	110	125.70	111.50	125.70	111.50	110.20	108.00	108.00	122.00	122.00	202.50	405.00
4050010802	160	181.50	162.30	181.50	162.30	160.30	158.00	158.00	141.00	141.00	236.50	485.00
4050010803	200	225.00	202.50	225.00	202.50	202.20	197.00	197.00	152.00	152.00	270.00	555.00
4050010804	225	251.50	227.50	251.50	227.50	225.30	221.00	221.00	139.00	139.00	288.00	595.00
4050010805	250	276.50	252.30	276.50	252.30	250.30	247.00	247.00	152.00	152.00	312.00	640.00
4050010806	315	347.80	318.30	347.80	318.30	315.20	312.00	312.00	198.00	198.00	393.00	785.00
4050010807	160*110	181.50	162.30	125.70	111.50	160.30	158.00	108.00	122.00	141.00	220.00	450.00
4050010808	200*110	225.00	202.50	125.70	111.50	202.20	197.00	108.00	122.00	152.00	240.00	495.00
4050010809	200*160	225.00	202.50	181.50	162.30	202.20	197.00	158.00	141.00	152.00	250.00	515.00
4050010810	225*110	251.50	227.50	125.70	111.50	225.30	221.00	108.00	122.00	139.00	263.00	485.00
4050010811	225*160	251.50	227.50	181.50	162.30	225.30	221.00	158.00	141.00	139.00	290.00	520.00
4050010812	250*110	276.50	252.30	125.70	111.50	250.30	247.00	108.00	122.00	152.00	275.00	515.00
4050010813	250*160	276.50	252.30	181.50	162.30	250.30	247.00	158.00	141.00	152.00	302.00	538.00
4050010814	250*200	276.50	252.30	225.00	202.50	250.30	247.00	197.00	152.00	152.00	228.00	555.00
4050010815	315*110	347.80	318.30	125.70	111.50	315.20	312.00	108.00	122.00	198.00	317.00	595.00
4050010816	315*160	347.80	318.30	181.50	162.30	315.20	312.00	158.00	141.00	198.00	336.50	625.00
4050010817	315*200	347.80	318.30	225.00	202.50	315.20	312.00	197.00	152.00	198.00	393.00	660.00

PVC-U TEE WITH FLANGED BRANCH (F/F)



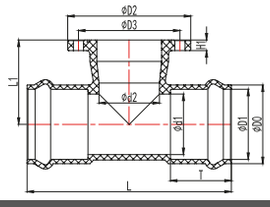

Code	Size DN	Dimensions (mm)										
		D0	D1	D2	D3	d1	d2	T	H1	L1	L	N
4050011501	110	125.70	111.50	224.00	185.00	108.00	108.00	122.00	19.00	160.00	405.00	8
4050011502	160	181.50	162.30	284.00	235.00	158.00	158.00	141.00	23.00	195.00	473.00	8
4050011503	200	225.00	202.50	338.00	300.00	197.00	197.00	152.00	26.00	230.00	540.00	8
4050011504	225	251.50	227.50	344.00	293.00	221.00	221.00	139.00	29.50	255.00	576.00	8
4050011505	250	276.50	252.30	394.00	250.00	247.00	247.00	152.00	31.50	280.00	624.00	12
4050011506	315	347.80	318.30	443.00	398.00	312.00	312.00	198.00	36.00	330.00	788.00	12
4050011507	160*110	181.50	162.30	224.00	185.00	158.00	108.00	141.00	19.00	192.00	446.00	8
4050011508	200*110	225.00	202.50	224.00	185.00	197.00	108.00	152.00	19.00	215.00	488.00	8
4050011509	200*160	225.00	202.50	284.00	235.00	197.00	158.00	152.00	23.00	220.00	500.00	8
4050011510	225*110	251.50	227.50	224.00	185.00	221.00	108.00	139.00	19.00	233.50	466.00	8
4050011511	225*160	251.50	227.50	284.00	235.00	221.00	158.00	139.00	23.00	245.00	504.00	8
4050011512	250*110	276.50	252.30	224.00	185.00	247.00	108.00	152.00	19.00	245.50	500.00	8
4050011513	250*160	276.50	252.30	284.00	235.00	247.00	158.00	152.00	23.00	257.00	538.00	8
4050011514	250*200	276.50	252.30	338.00	300.00	247.00	197.00	152.00	26.00	268.50	578.00	8
4050011515	315*110	347.80	318.30	224.00	185.00	312.00	108.00	198.00	19.00	277.50	592.00	8
4050011516	315*160	347.80	318.30	284.00	235.00	312.00	158.00	198.00	23.00	288.50	626.00	8
4050011517	315*200	347.80	318.30	338.00	300.00	312.00	197.00	198.00	26.00	299.00	667.00	8

PVC-U TEE WITH FLANGED BRANCH (F/S)



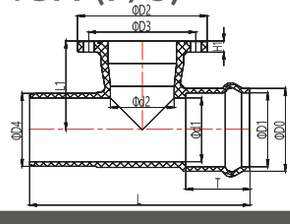

Code	Size DN	Dimensions (mm)											
		D0	D1	D2	D3	D4	d1	d2	T	H1	L1	L	N
4050010901	110	125.70	111.50	224.00	185.00	110.20	108.00	108.00	122.00	19.00	160.00	405.00	8
4050010902	160	181.50	162.30	284.00	235.00	160.30	158.00	158.00	141.00	23.00	195.00	485.00	8
4050010903	200	225.00	202.50	338.00	300.00	200.20	197.00	197.00	152.00	26.00	230.00	555.00	8
4050010904	225	251.50	227.50	344.00	293.00	225.30	221.00	221.00	139.00	29.50	255.00	595.00	8
4050010905	250	276.50	252.30	394.00	250.00	250.30	247.00	247.00	152.00	31.50	280.00	640.00	12
4050010906	315	347.80	318.30	443.00	398.00	315.20	312.00	312.00	198.00	36.00	330.00	785.00	12
4050010907	160*110	181.50	162.30	224.00	185.00	160.30	158.00	108.00	141.00	19.00	192.00	450.00	8
4050010908	200*110	225.00	202.50	224.00	185.00	200.20	197.00	108.00	152.00	19.00	215.00	495.00	8
4050010909	200*160	225.00	202.50	284.00	235.00	200.20	197.00	158.00	152.00	23.00	220.00	515.00	8
4050010910	225*110	251.50	227.50	224.00	185.00	225.30	221.00	108.00	139.00	19.00	233.50	485.00	8
4050010911	225*160	251.50	227.50	284.00	235.00	225.30	221.00	158.00	139.00	23.00	245.00	520.00	8
4050010912	250*110	276.50	252.30	224.00	185.00	250.30	247.00	108.00	152.00	19.00	257.00	515.00	8
4050010913	250*160	276.50	252.30	284.00	235.00	250.30	247.00	158.00	152.00	23.00	257.00	538.00	8
4050010914	250*200	276.50	252.30	338.00	300.00	250.30	247.00	197.00	152.00	26.00	268.50	555.00	8
4050010915	315*110	347.80	318.30	224.00	185.00	315.20	312.00	108.00	198.00	19.00	277.50	595.00	8
4050010916	315*160	347.80	318.30	284.00	235.00	315.20	312.00	158.00	198.00	23.00	288.50	625.00	8
4050010917	315*200	347.80	318.30	338.00	300.00	315.20	312.00	197.00	198.00	26.00	299.00	660.00	8

PVC-U TEE (F/F/S)



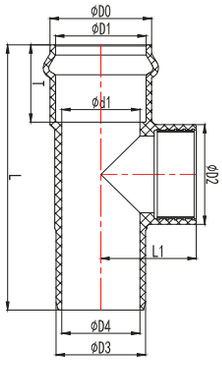

Code	Size DN	Dimensions (mm)								
		D0	D1	D2	D3	D4	d1	T	L1	L
4050020101	110*2”	125.70	111.50	80.00	110.20	79.00	108.00	122.00	79.00	335.00
4050020102	160*2”	181.50	162.30	80.00	160.30	140.00	158.00	141.00	102.00	375.00
4050020103	200*2”	225.00	202.50	80.00	202.20	178.00	197.00	152.00	123.00	410.00

PVC-U COUPLING (F/F)



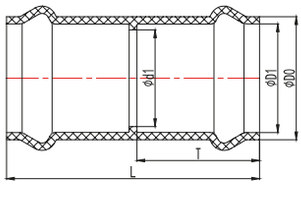

Code	Size DN	Dimensions (mm)				
		D0	D1	d1	T	L
4050011001	63	74.50	65.30	62.00	76.00	158.00
4050011002	75	88.50	77.50	73.50	84.50	177.50
4050011003	90	105.50	92.50	88.50	95.00	200.00
4050011004	110	125.70	111.50	108.00	122.00	280.00
4050011005	160	181.50	162.30	158.00	141.00	303.00
4050011006	200	225.00	202.50	197.00	152.00	310.00
4050011007	225	251.50	227.50	221.00	139.00	362.00
4050011008	250	276.50	252.30	247.00	152.00	382.70
4050011009	315	347.80	318.30	312.00	198.00	484.00
4050011010	355	388.50	356.63	326.00	235.00	384.30

PVC-U REDUCER (F-F)



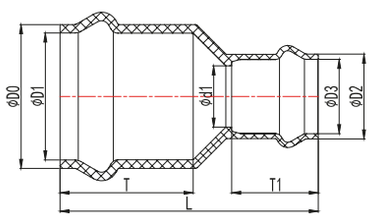

Code	Size DN	Dimensions (mm)							
		D0	D1	D2	D3	d1	T1	T	L
4050011101	75*63	88.50	77.50	74.50	65.30	62.00	76.00	84.50	168.00
4050011102	90*63	105.50	92.50	74.50	65.30	62.00	76.00	95.00	194.00
4050011103	90*75	105.50	92.50	88.50	77.50	73.50	84.50	95.00	200.00
4050011104	110*63	125.70	111.50	74.50	65.30	62.00	76.00	122.00	232.00
4050011105	110*75	125.70	111.50	88.50	77.50	73.50	84.50	122.00	236.00
4050011106	110*90	125.70	111.50	105.50	92.50	88.50	95.00	122.00	238.00
4050011107	160*110	181.50	162.30	125.70	111.50	108.00	122.00	141.00	312.00
4050011108	200*110	225.00	202.50	125.70	111.50	108.00	122.00	152.00	335.50
4050011109	200*160	225.00	202.50	181.50	162.30	158.00	141.00	152.00	300.00
4050011110	225*110	251.50	227.50	125.70	111.50	108.00	122.00	139.00	358.00
4050011111	225*160	251.50	227.50	181.50	162.30	158.00	141.00	139.00	346.00
4050011112	225*200	251.50	227.50	225.00	202.50	197.00	152.00	139.00	389.25
4050011113	250*110	276.50	252.30	125.70	111.50	108.00	122.00	152.00	387.00
4050011114	250*160	276.50	252.30	181.50	162.30	158.00	141.00	152.00	375.50
4050011115	250*200	276.50	252.30	225.00	202.50	197.00	152.00	152.00	389.00
4050011116	250*225	276.50	252.30	251.50	227.50	221.00	139.00	152.00	371.75
4050011117	315*110	347.80	318.30	125.70	111.50	108.00	122.00	198.00	444.60
4050011118	315*160	347.80	318.30	181.50	162.30	158.00	141.00	198.00	436.00
4050011119	315*200	347.80	318.30	225.00	202.50	197.00	152.00	198.00	454.00
4050011120	315*225	347.80	318.30	251.50	227.50	221.00	139.00	198.00	458.00
4050011121	315*250	347.80	318.30	276.50	252.30	247.00	152.00	198.00	458.00
4050011122	355*200	388.50	356.63	225.00	202.50	197.00	152.00	235.00	455.00
4050011123	355*315	388.50	356.63	347.80	318.30	312.00	198.00	235.00	476.00

PVC-U FAUCET FLANGE



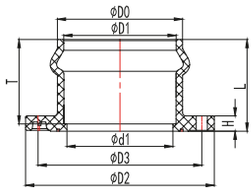

Code	Size DN	Dimensions (mm)								
		D0	D1	D2	D3	d1	T	H	L	n
4050011401	63	74.50	65.30	165.00	125.00	62.00	76.00	17.30	84.00	4
4050011402	75	88.50	77.50	185.00	145.00	73.50	84.50	18.00	92.30	4
4050011403	90	105.30	92.50	200.00	160.00	88.50	95.00	18.80	103.00	8
4050011404	110	125.70	111.50	225.00	180.00	108.00	122.00	19.50	134.00	8
4050011405	125	142.10	127.00	250.00	210.00	123.00	135.00	21.60	135.00	8
4050011406	140	160.10	143.00	251.80	195.40	125.90	141.30	20.30	151.40	8
4050011407	160	181.50	162.30	285.00	240.00	158.00	141.00	22.80	150.00	8
4050011408	200	225.50	202.50	345.00	295.00	197.00	152.00	26.50	163.00	8
4050011409	225	250.50	227.50	345.00	295.00	221.00	139.00	30.00	153.50	8
4050011410	250	276.50	252.30	395.00	350.00	247.00	152.00	32.00	167.50	12
4050011411	315	347.50	318.30	445.00	400.00	312.00	198.00	35.00	210.00	12
4050011412	355	388.50	359.00	510.00	460.00	326.00	235.00	38.00	210.00	16
4050011413	400	435.00	404.00	570.00	510.00	568.20	228.00	42.50	247.00	16

PVC-U Y-TEE



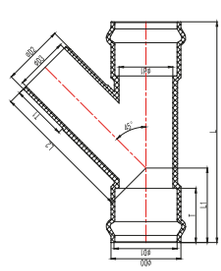

Code	Size DN	Dimensions (mm)									
		D0	D1	D2	D3	d1	T1	T	L1	L2	L
4050011201	110	125.7	111.5	110.2	96	108	125	122	160.8	282	455
4050011202	160	181.5	162.3	160.3	140	158	145	141	194	371.2	575
4050011203	200	225	202.5	200.2	178	197	160	152	215.8	426.5	660
4050011204	250	276.5	252.3	250.3	227	247	180	152	232.5	508.7	739
4050011205	315	347.8	318.3	315.2	288	312	202	198	284	636.8	917

PVC-U LATERAL CROSS (F/F/S/S)



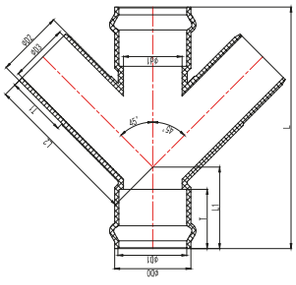

Code	Size DN	Dimensions (mm)									
		D0	D1	D2	D3	d1	T1	T	L1	L2	L
4050011301	110	125.70	111.50	110.20	96.00	108.00	125.00	122.00	160.80	282.00	455.00
4050011302	160	181.50	162.30	160.30	140.00	158.00	145.00	141.00	194.00	371.20	575.00
4050011303	200	225.00	202.50	200.20	178.00	197.00	160.00	152.00	215.80	426.50	660.00
4050011304	250	276.50	252.30	250.30	227.00	247.00	180.00	152.00	232.50	508.70	739.00
4050011305	315	347.80	318.30	315.20	288.00	312.00	202.00	198.00	284.00	636.80	917

MEMO

PVC-U VALVES RANGE



PVC-U DOUBLE UNION BALL VALVE



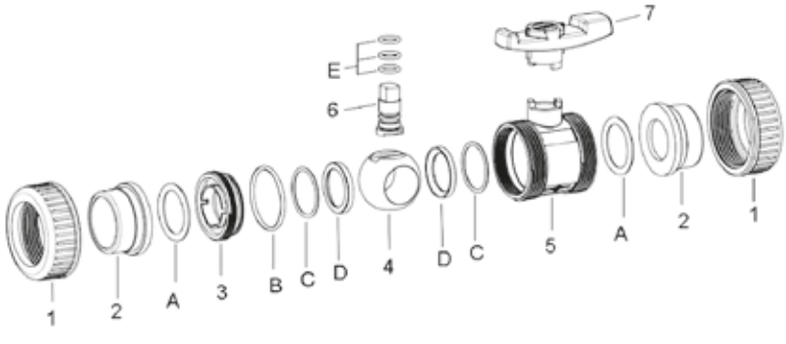

1- Union nut
2- End connector
3- Union Bushing
4- Ball
5- Body
6- Steam
7- Lever.
A- Face seal
B- Body seal
C- Baking seal
D- Ball seal
E- Stem seal

MAX WORKING PRESSURE:

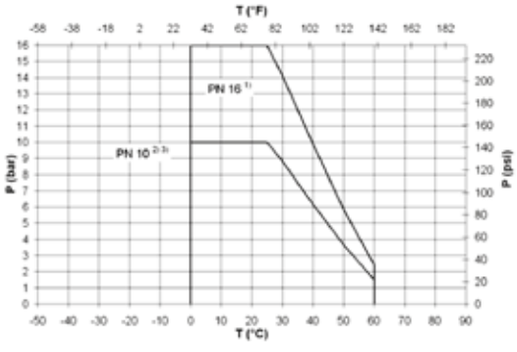

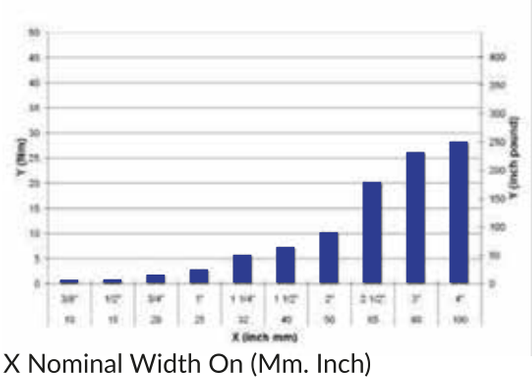

X Nominal Width On (Mm. Inch)
Y Torque (Nm. Inch Pound)
Guide Values At Nominal Pressure

Comments:

The Pressure-temperature diagrams are based on a service
Life of 25 Years and apply to water or similar media.

1) For nominal dimensions of DN10 - DN50. The Central body of the ball valve is designed for nominal pressure Pn16
2) For nominal dimensions of DN65 - DN100. The central body of the ball vValve Is Designed For Nominal pressure PN10
3) Depending on the end connection. At nominal dimensions of DN10 - DN50. The nominal pressure reduces To PNl0

P Permissible operating pressure in bar. Psit
Temperature in °c. °f

PRESSURE LOSS:

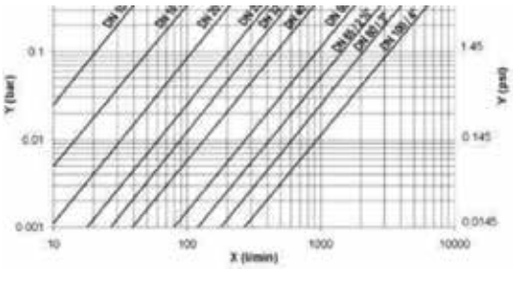

PVC-U DOUBLE UNION BALL VALVE



METRIC /PLAIN

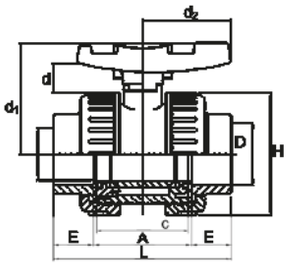

Code	Dimensions (mm)								
	D	I	D1	D2	D	C	E	A	L
501010100101	20	50	51	36	12	42	16	48	80
501010100102	25	59	58	39	15	48	19	53	91
501010100103	32	68	65	45	16	54	22	58	102
501010100104	40	80	76	51	18	62	26	68	120
501010100105	50	94	88	57	21	72	31	78	140
501010100106	63	115	103	66	23	86	38	93	169
501010100107	75	145	124	78	24	110	44	118	206
501010100108	90	168	137	84	26	128	51	140	242
501010100109	110	210	162	96	28	150	61	160	282

IMPERIAL/BS

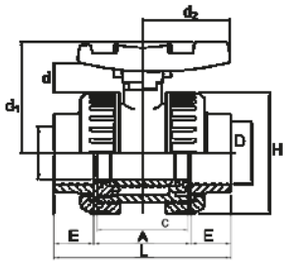

Code	Dimensions (mm)								
	D	I	D1	D2	D	C	E	A	L
501010100201	1/2"	50	51	36	12	42	16	48	80
501010100202	3/4"	59	58	39	15	48	19	53	91
501010100203	1"	68	65	45	16	54	22	58	102
501010100204	1-1/4"	80	76	51	18	62	26	68	120
501010100205	1-1/2"	94	88	57	21	72	31	78	140
501010100206	2"	115	103	66	23	86	38	93	169
501010100207	2-1/2"	145	124	78	24	110	44	118	206
501010100208	3"	168	137	84	26	128	51	140	242
501010100209	4"	210	162	96	28	150	61	160	282

IMPERIAL/ THREADED

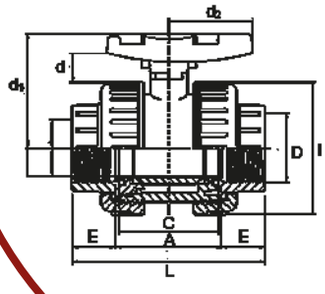

Code	Dimensions (mm)								
	D	I	D1	D2	D	C	E	A	L
501010100301	1/2"	50	51	36	12	42	16	48	80
501010100302	3/4"	59	58	39	15	48	19	53	91
501010100303	1"	68	65	45	16	54	22	58	102
501010100304	1-1/4"	80	76	51	18	62	26	68	120
501010100305	1-1/2"	94	88	57	21	72	31	78	140
501010100306	2"	115	103	66	23	86	38	93	169
501010100307	2-1/2"	145	124	78	24	110	44	118	206
501010100308	3"	168	137	84	26	128	51	140	242
501010100309	4"	210	162	96	28	150	61	160	282

PVC-U SINGLE UNION BALL VALVE



METRIC /PLAIN

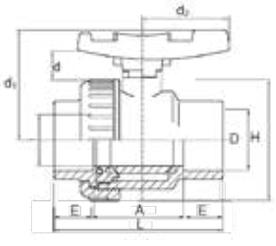

Code	Dimensions (mm)								
	D	I	D1	D2	D	C	E	A	L
501010100401	20	50	51	36	12	42	16	45	77
501010100402	25	59	58	39	15	48	19	50	88
501010100403	32	68	65	45	16	54	22	54	98
501010100404	40	80	76	51	18	62	26	64	116
501010100405	50	94	88	57	21	72	31	74	136
501010100406	65	115	103	66	23	86	38	89	165
501010100407	80	145	124	78	24	110	44	107	195
501010100408	100	168	137	84	26	128	51	130	232
501010100409	110	210	162	96	28	150	61	152	274

IMPERIAL/BS

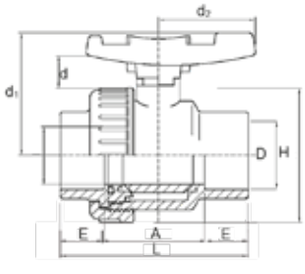

Code	Dimensions (mm)								
	D	I	D1	D2	D	C	E	A	L
501010100501	1/2"	50	51	36	12	42	16	45	77
501010100502	3/4"	59	58	39	15	48	19	50	88
501010100503	1"	68	65	45	16	54	22	54	98
501010100504	1-1/4"	80	76	51	18	62	26	64	116
501010100505	1-1/2"	94	88	57	21	72	31	74	136
501010100506	2"	115	103	66	23	86	38	89	165
501010100507	2-1/2"	145	124	78	24	110	44	107	195
501010100508	3"	168	137	84	26	128	51	130	232
501010100509	4"	210	162	96	28	150	61	152	274

IMPERIAL/ THREADED

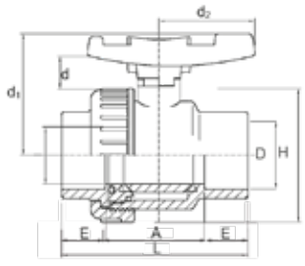

Code	Dimensions (mm)								
	D	I	D1	D2	D	C	E	A	L
501010200101	1/2"	50	51	36	12	42	16	45	77
501010200102	3/4"	59	58	39	15	48	19	50	88
501010200103	1"	68	65	45	16	54	22	54	98
501010200104	1-1/4"	80	76	51	18	62	26	64	116
501010200105	1-1/2"	94	88	57	21	72	31	74	136
501010200106	2"	115	103	66	23	86	38	89	165
501010200107	2-1/2"	145	124	78	24	110	44	107	195
501010200108	3"	168	137	84	26	128	51	130	232
501010200109	4"	210	162	96	28	150	61	152	274

PVC-U SOCKET TRUE UNION BALL VALVE

NEW



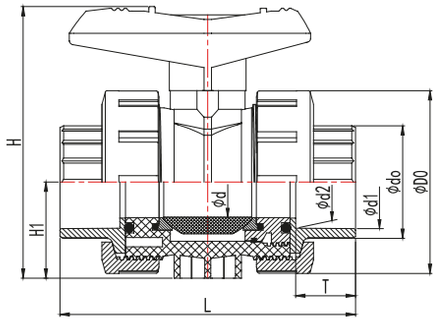

Code	Size DN	Dimensions (mm)								
		D0	d0	d1	d2	d	T	H1	H	L
501010100501	15(20)	51.50	27.40	20.30	19.95	15.50	17.00	26.30	82.80	95.50
501010100502	20(25)	59.00	32.70	25.30	24.95	20.50	19.50	30.60	92.80	109.10
501010100503	25(32)	70.00	41.30	32.30	31.90	26.00	23.00	39.10	109.20	122.60
501010100504	32(40)	85.40	49.60	40.35	39.90	33.00	27.00	44.20	131.80	147.30
501010100505	40(50)	98.90	60.20	50.35	49.90	39.00	32.00	52.20	143.20	158.80
501010100506	50(63)	122.20	76.00	63.40	62.90	51.00	38.50	71.30	175.70	182.80
501010100507	65(75)	158.60	89.60	75.40	74.90	64.00	44.50	82.80	231.50	234.00
501010100508	80(90)	192.10	105.40	90.50	89.90	81.00	52.00	99.30	260.60	255.00
501010100509	100(110)	223.60	128.40	110.60	109.90	99.00	62.00	115.20	292.10	297.00

PVC-U SOCKET TRUE UNION BALLVALVE ASTM SCH80

Code	Size DN	Dimensions (mm)								
		D0	d0	d1	d2	d	H1	H	T	L
501010100601	1/2"	51.50	27.40	21.54	21.23	15.50	26.30	82.80	23.22	107.90
501010100602	3/4"	59.00	32.70	26.87	26.57	20.50	30.60	92.80	26.40	122.90
501010100603	1"	70.00	41.30	33.66	33.27	26.00	39.10	109.20	29.57	135.70
501010100604	1-1/4"	85.40	49.60	42.42	42.04	33.00	44.20	131.80	32.75	158.80
501010100605	1-1/2"	98.90	60.20	48.56	48.11	39.00	52.20	143.20	32.00	166.80
501010100606	2"	122.20	76.00	60.63	60.17	51.00	71.30	175.70	39.10	182.80
501010100607	2-1/2"	158.60	89.60	73.38	72.85	64.00	82.80	231.50	44.50	236.00
501010100608	3"	192.10	105.40	89.31	88.70	81.00	99.30	260.60	48.60	249.00
501010100609	4"	223.60	128.40	114.76	114.07	99.00	115.20	292.10	58.15	289.00

N0.	Name	Quantity	Material
1	Lever	1	PVC-U/PP
2	Shaft	1	PVC-U
3	Nut	2	PVC-U
4	Faucet	2	PVC-U
5	Body	1	PVC-U
6	Ball	1	PVC-U
7	Ball Seat	2	PTFE
8	O-ring1	2	EPDM
9	O-ring2	2	EPDM
10	Seal Carrier	1	PVC-U
11	O-ring3	1	EPDM
12	O-ring4	2	EPDM

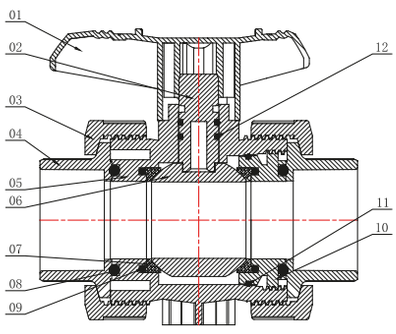

Valve description

1. Material: PVC-U
2. Size: DN15-100
3. Standard: DIN, ASTM
4. Connection: Socket
5. Color: Handle-Red, Body-Dark gray

Product Features

1. Switch torque is small
2. Simple economy
3. The material is nano-modified to improve the pressure resistance and impact resistance of the product
4. Thickened valve body for high compression resistance
5. Valve factory 100% pressure test

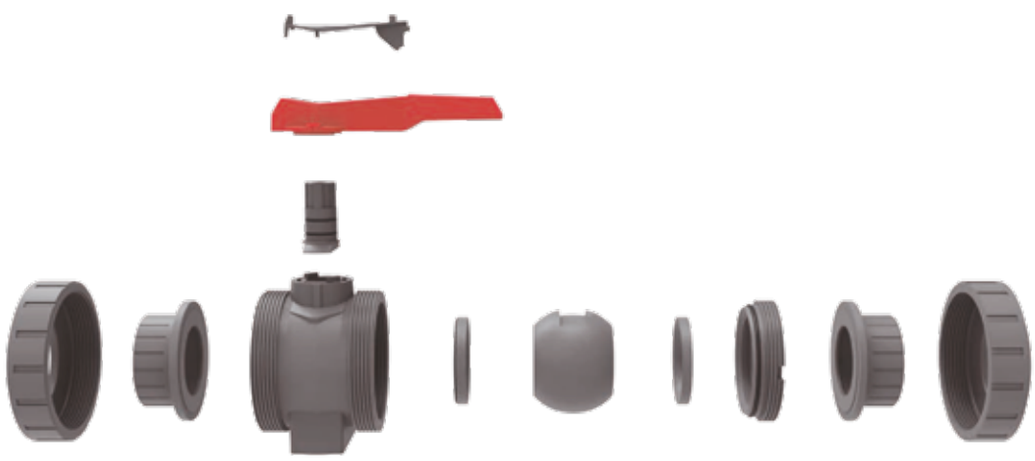

PVC-U THREADED TRUE UNION BALL VALVE

NEW



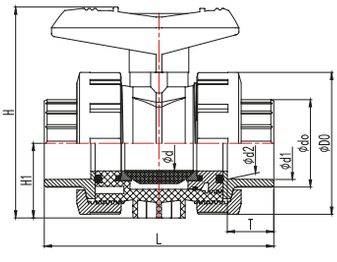

Code	Size DN	Dimensions (mm)										
		D0	d0	d1	d2	d3	d	H1	H	T	L	Tr
501010200401	1/2"	51.50	30.43	20.95	18.63	16.00	15.50	26.30	82.80	17.00	95.50	1/2"
501010200402	3/4"	59.00	36.30	26.44	24.12	20.60	20.50	30.60	92.80	19.50	109.10	3/4"
501010200403	1"	70.00	44.61	33.25	30.29	26.00	26.00	39.10	109.20	23.00	122.60	1"
501010200404	1-1/4"	85.40	53.87	41.91	38.95	33.00	33.00	44.20	131.80	27.00	147.30	1-1/4"
501010200405	1-1/2"	98.90	61.12	47.80	44.85	39.00	39.00	52.20	143.20	32.00	158.80	1-1/2"
501010200406	2"	122.20	73.83	59.61	56.66	51.00	51.00	71.30	175.70	38.50	182.80	2"
501010200407	2-1/2"	158.60	87.71	75.18	74.23	64.00	64.00	82.80	231.50	44.50	234.00	2-1/2"
501010200408	3"	192.10	106.81	87.88	84.93	81.00	81.00	99.30	260.60	52.00	255.00	3"
501010200409	4"	223.60	133.46	113.03	110.07	99.00	99.00	115.20	292.10	62.00	297.00	4"

Code	Size DN	Dimensions (mm)										
		D0	d0	d1	d2	d3	d	H1	H	T	L	Tr
501010200401	1/2"	51.50	30.43	20.95	18.63	16.00	15.50	26.30	82.80	17.00	95.50	1/2"
501010200402	3/4"	59.00	36.30	26.44	24.12	20.60	20.50	30.60	92.80	19.50	109.10	3/4"
501010200403	1"	70.00	44.61	33.25	30.29	26.00	26.00	39.10	109.20	23.00	122.60	1"
501010200404	1-1/4"	85.40	53.87	41.91	38.95	33.00	33.00	44.20	131.80	27.00	147.30	1-1/4"
501010200405	1-1/2"	98.90	61.12	47.80	44.85	39.00	39.00	52.20	143.20	32.00	158.80	1-1/2"
501010200406	2"	122.20	73.83	59.61	56.66	51.00	51.00	71.30	175.70	38.50	182.80	2"
501010200407	2-1/2"	158.60	87.71	75.18	74.23	64.00	64.00	82.80	231.50	44.50	234.00	2-1/2"
501010200408	3"	192.10	106.81	87.88	84.93	81.00	81.00	99.30	260.60	52.00	255.00	3"
501010200409	4"	223.60	133.46	113.03	110.07	99.00	99.00	115.20	292.10	62.00	297.00	4"

N0.	Name	Quantity	Material
1	Lever	1	PVC-U/PP
2	Shaft	1	PVC-U
3	Nut	2	PVC-U
4	Faucet	2	PVC-U
5	Body	1	PVC-U
6	Ball	1	PVC-U
7	Ball Seat	2	PTFE
8	O-ring1	2	EPDM
9	O-ring2	2	EPDM
10	Seal Carrier	1	PVC-U
11	O-ring3	1	EPDM
12	O-ring4	2	EPDM

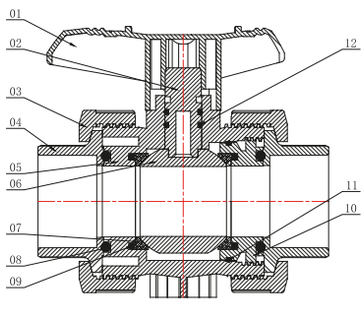

Valve description

1. Material: PVC-U
2. Size: DN15-100 1/ 2” -4”
3. Standard: DIN, ASTM
4. Connection: Threaded
5. Color: Handle-Red, Body-Dark gray

Product Features

1. Switch torque is small.
2. Simple economy.
3. The material is nano-modified to improve the pressure resistance and impact resistance of the product.
4. Thickened valve body for high compression resistance.
5. Valve factory 100% pressure test.

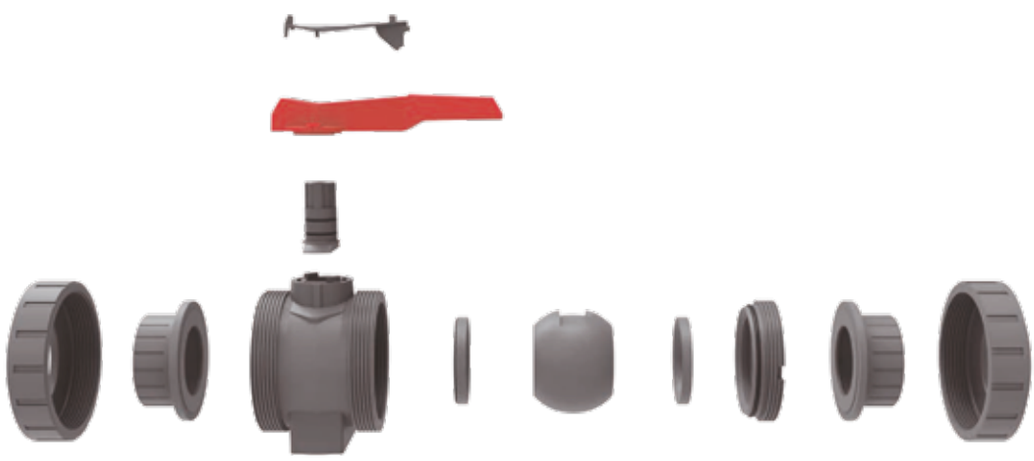

PVC-U FLANGED TRUE UNION BALL VALVE



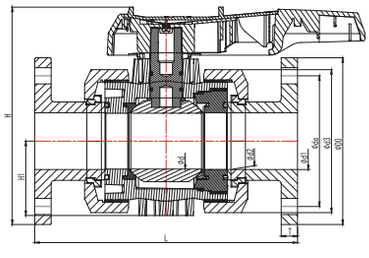

Code	Size DN	Dimensions (mm)									
		D0	d0	d1	d2	d3	d	H1	H	T	L
501010100701	15(20)	95.00	65.00	20.30	19.95	51.50	15.50	26.30	103.90	13.00	143.00
501010100702	20(25)	105.00	75.00	25.30	24.95	59.00	20.50	30.60	114.66	14.00	172.00
501010100703	25(32)	115.00	85.00	32.30	31.90	70.00	26.00	39.10	127.56	15.00	187.00
501010100704	32(40)	140.00	100.00	40.35	39.90	85.40	33.00	44.20	157.51	15.00	190.00
501010100705	40(50)	150.00	110.00	50.35	49.90	98.90	39.00	52.20	166.00	17.00	212.00
501010100706	50(63)	165.00	125.00	63.40	62.90	122.20	51.00	71.30	197.50	17.00	234.00
501010100707	65(75)	185.00	145.00	75.40	74.90	158.60	64.00	82.80	241.20	18.00	290.00
501010100708	80(90)	200.00	160.00	90.50	89.90	192.10	81.00	99.30	261.20	18.00	310.00
501010100709	100(110)	220.00	180.00	110.60	109.90	223.60	99.00	115.20	286.68	18.00	372.00

Valve description

1. Material: PVC-U
2. Size: DN15-100
3. Standard: DIN
4. Connection: Flanged
5. Color: Handle-Red, Body-Dark gray

N0.	Name	Quantity	Material
01	Lever	1	PVC-U/PP
02	Shaft	1	PVC-U
03	Nut	2	PVC-U
04	Flange	2	PVC-U
05	Body	1	PVC-U
06	Ball	1	PVC-U
07	Ball Seat	2	PTFE
08	O-ring1	2	EPDM
09	Seal Carrier	1	PVC-U
10	O-ring2	2	EPDM
11	O-ring3	1	EPDM
12	Fixed snap ring	2	PVC-U
13	O-ring4	2	EPDM

Product Features

1. Switch torque is small.
2. Simple economy.
3. The material is nano-modified to improve the pressure resistance and impact resistance of the product.
4. Thickened valve body for high compression resistance.
5. Factory 100% pressure test

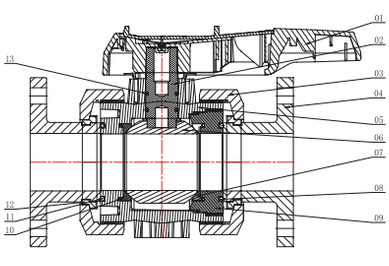

PVC-U PNEUMATIC SOCKET TRUE UNION BALL VALVE



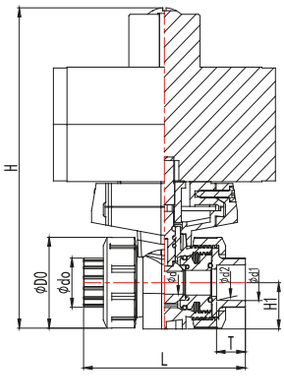

Code	Size DN	Dimensions (mm)								
		D0	d0	d1	d2	d	H1	H	T	L
501020100101	15(20)	51.50	27.40	20.30	19.95	15.50	26.30	156.50	17.00	95.50
501020100102	20(25)	59.00	32.70	25.30	24.95	20.50	30.60	194.00	19.50	109.10
501020100103	25(32)	70.00	41.30	32.30	31.90	26.00	39.10	210.00	23.00	122.60
501020100104	32(40)	85.40	49.60	40.35	39.90	33.00	44.20	243.40	27.00	147.30
501020100105	40(50)	98.90	60.20	50.35	49.90	39.00	52.20	268.90	32.00	158.80
501020100106	50(63)	122.20	76.00	63.40	62.90	51.00	71.30	301.20	38.50	182.80
501020100107	65(75)	158.60	89.60	75.40	74.90	64.00	82.80	373.60	44.50	234.00
501020100108	80(90)	192.10	105.40	90.50	89.90	81.00	99.30	430.10	52.00	255.00
501020100109	100(110)	223.60	128.40	110.60	109.90	99.00	115.20	493.60	62.00	297.00

PVC-U PNEUMATIC SOCKET TRUE UNION BALL VALVE ASTM SCH80

Code	Size DN	Dimensions (mm)								
		D	d0	d1	d2	d	H1	H	T	L
501020100201	1/2"	51.50	27.40	21.54	21.23	15.50	26.30	156.50	23.22	107.90
501020100202	3/4"	59.00	32.70	26.87	26.57	20.50	30.60	194.00	26.40	122.90
501020100203	1"	70.00	41.30	33.66	33.27	26.00	39.10	210.00	29.57	135.70
501020100204	1-1/4"	85.40	49.60	42.42	42.04	33.00	44.20	243.40	32.75	158.80
501020100205	1-1/2"	98.90	60.20	48.56	48.11	39.00	52.20	268.90	32.00	166.80
501020100206	2"	122.20	76.00	60.63	60.17	51.00	71.30	301.20	39.10	182.80
501020100207	2-1/2"	158.60	89.60	73.38	72.85	64.00	82.80	373.60	44.50	236.00
501020100208	3"	192.10	105.40	89.31	88.70	81.00	99.30	430.10	48.60	249.00
501020100209	4"	223.60	128.40	114.76	114.07	99.00	115.20	493.60	58.15	289.00

N0.	Name	Quantity	Material
01	Pneumatic Actuator	1	Aluninum alloy/plastic
02	Connector top cover	1	PP
03	Bolt	2	Stainless steel 304
04	Connector bottom cover	1	PP
05	Nut	2	PVC-U
06	Faucet	2	PVC-U
07	Seal Carrier	1	PVC-U
08	Ball Seat	2	PTFE
09	O-ring1	2	EPDM
10	O-ring2	2	EPDM
11	O-ring3	1	EPDM
12	Ball	1	PVC-U
13	O-ring4	2	EPDM
14	Fixed buckle	2	PP
15	Connection	1	PP
16	Bolt	4	Stainless steel 304
17	Body	1	PVC-U

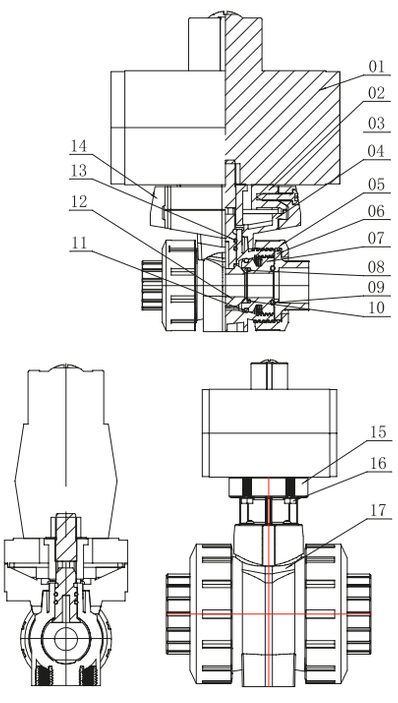

Valve description

1. Material: PVC-U
2. Size: DN15-100 1/ 2” -4”
3. Standard: DIN, ASTM
4. Connection: Socket
5. Color: Gray

Product Features

1. Switch torque is small.
2. Simple economy.
3. The material is nano-modified to improve the pressure resistance and impact resistance of the product.
4. Thickened valve body for high compression resistance.
5. Factory 100% pressure test
6. Actuator performs 500,000 opening and closing tests.
7. Optional single-acting actuator and various solenoid valves, return positions witch.

PVC-U PNEUMATIC FLANGED UNION BALL VALVE

NEW



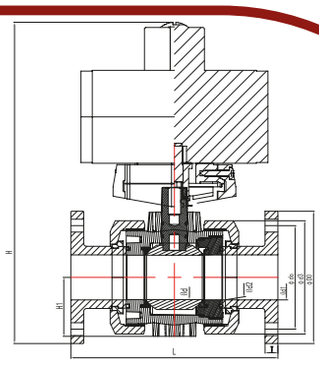

Code	Size DN	Dimensions (mm)								
		D0	d0	d1	d2	d	H1	H	T	L
501020300101	15(20)	95.00	65.00	20.30	19.95	15.50	26.30	178.25	13.00	143.00
501020300102	20(25)	105.00	75.00	25.30	24.95	20.50	30.60	217.00	14.00	172.00
501020300103	25(32)	115.00	85.00	32.30	31.90	26.00	39.10	232.50	15.00	187.00
501020300104	32(40)	140.00	100.00	40.35	39.90	33.00	44.20	270.70	15.00	190.00
501020300105	40(50)	150.00	110.00	50.35	49.90	39.00	52.20	294.45	17.00	212.00
501020300106	50(63)	165.00	125.00	63.40	62.90	51.00	71.30	322.60	17.00	234.00
501020300107	65(75)	185.00	145.00	75.40	74.90	64.00	82.80	386.80	18.00	290.00
501020300108	80(90)	200.00	160.00	90.50	89.90	81.00	99.30	434.05	18.00	310.00
501020300109	100(110)	220.00	180.00	110.60	109.90	99.00	115.20	491.80	18.00	372.00

Valve description

1. Material: PVC-U
2. Size: DN15-100
3. Standard: DIN
4. Connection: Flanged
5. Color: Gray

Product Features

1. Switch torque is small.
2. Simple economy.
3. The material is nano-modified to improve the pressure resistance and impact resistance of the product.
4. Thickened valve body for high compression resistance
5. Factory 100% pressure test.
6. Optional single-acting actuator and various solenoid valves, return position switch.

NO.	Name	Quantity	Material
01	Pneumatic Actuator	1	Aluminium alloy/Plastic
02	Connector top cover	1	PP
03	Bolt	2	Stainless steel 304
04	Connector bottom cover	1	PP
05	Nut	2	PVC-U
06	Flange	2	PVC-U
07	Seal Carrier	1	PVC-U
08	Ball Seat	2	PTFE
09	O-ring1	2	EPDM
10	O-ring2	2	EPDM
11	O-ring3	1	EPDM
12	Ball	1	PVC-U
13	O-ring4	2	EPDM
14	Fixed buckle	2	PP
15	Connection	1	PP
16	Bolt	4	Stainless steel 304
17	Body	1	PVC-U
18	Snap ring	2	PVC-U

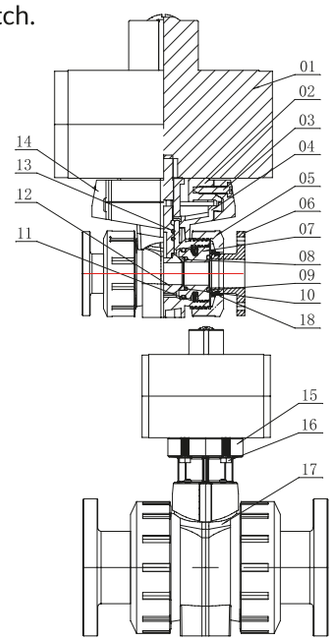

PVC-U PNEUMATIC THREADED TRUE UNION BALL VALVE

NEW



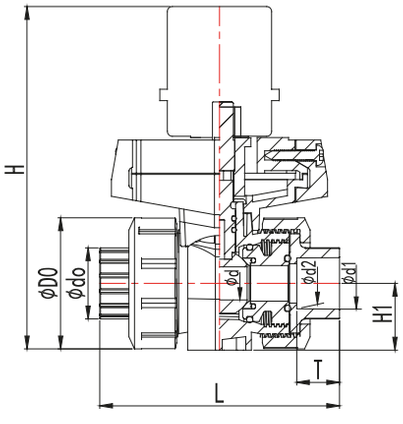

Code	Size DN	Dimensions (mm)								
		D0	d0	d1	d2	d	H1	H	T	L
501020200501	15(20)	51.50	30.43	20.95	18.63	15.50	26.30	156.50	17.00	95.50
501020200502	20(25)	59.00	36.30	26.44	24.12	20.50	30.60	194.00	19.50	109.10
501020200503	25(32)	70.00	44.61	33.25	30.29	26.00	39.10	210.00	23.00	122.60
501020200504	32(40)	85.40	53.87	41.91	38.95	33.00	44.20	243.40	27.00	147.30
501020200505	40(50)	98.90	61.12	47.80	44.85	39.00	52.20	268.90	32.00	158.80
501020200506	50(63)	122.20	73.83	59.61	56.66	51.00	71.30	301.20	38.50	182.80
501020200507	65(75)	158.60	87.71	75.18	74.23	64.00	82.80	373.60	44.50	234.00
501020200508	80(90)	192.10	106.81	87.88	84.93	81.00	99.30	430.10	52.00	255.00
501020200509	100(110)	223.60	133.46	113.03	110.07	99.00	115.20	493.60	62.00	297.00

PVC-U PNEUMATIC THREADED TRUE UNION BALLVALVE ASTM SCH80

Code	Size DN	Dimensions (mm)								
		D	d0	d1	d2	d	H1	H	T	L
501020200601	1/2"	51.50	30.43	20.95	18.63	15.50	26.30	156.50	17.00	95.50
501020200602	3/4"	59.00	36.30	26.44	24.12	20.50	30.60	194.00	19.50	109.10
501020200603	1"	70.00	44.61	33.25	30.29	26.00	39.10	210.00	23.00	122.60
501020200604	1-1/4"	85.40	53.87	41.91	38.95	33.00	44.20	243.40	27.00	147.30
501020200605	1-1/2"	98.90	61.12	47.80	44.85	39.00	52.20	268.90	32.00	158.80
501020200606	2"	122.20	73.83	59.61	56.66	51.00	71.30	301.20	38.50	182.80
501020200607	2-1/2"	158.60	87.71	75.18	74.23	64.00	82.80	373.60	44.50	234.00
501020200608	3"	192.10	106.81	87.88	84.93	81.00	99.30	430.10	52.00	255.00
501020200609	4"	223.60	133.46	113.03	110.07	99.00	115.20	493.60	62.00	297.00

N0.	Name	Quantity	Material
01	Pneumatic Actuator	1	Aluninum alloy/plastic
02	Connector top cover	1	PP
03	Bolt	2	Stainless steel 304
04	Connector bottom cover	1	PP
05	Nut	2	PVC-U
06	Faucet	2	PVC-U
07	Seal Carrier	1	PVC-U
08	Ball Seat	2	PTFE
09	O-ring1	2	EPDM
10	O-ring2	2	EPDM
11	O-ring3	1	EPDM
12	Ball	1	PVC-U
13	O-ring4	2	EPDM
14	Fixed buckle	2	PP
15	Connection	1	PP
16	Bolt	4	Stainless steel 304
17	Body	1	PVC -U

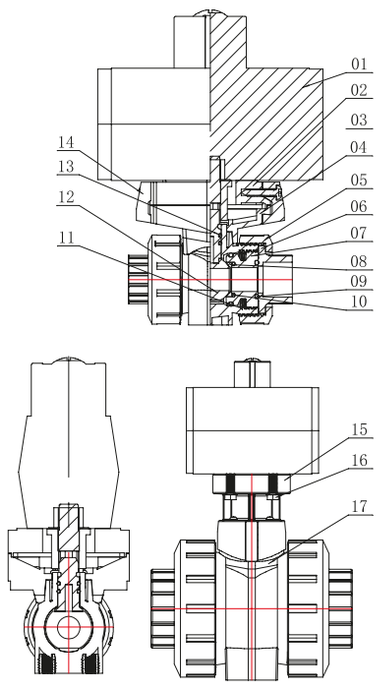

Valve Description

1. Material: PVC-U
2. Size: DN15-100 1/ 2” -4”
3. Standard: DIN, ASTM
4. Connection: Threaded
5. Color, Body: Gray

Product Features

1. Switch torque is small.
2. Simple economy.
3. The material is nano-modified to improve the pressure resistance and impact resistance of theproduct.
4. Thickened valve body for high compression resistance.
5. Factory 100% pressure test.
6. Optional single-acting actuator and various solenoid valves, return position switch.

PVC-U ELECTRIC SOCKET TRUE UNION BALL VALVE

NEW



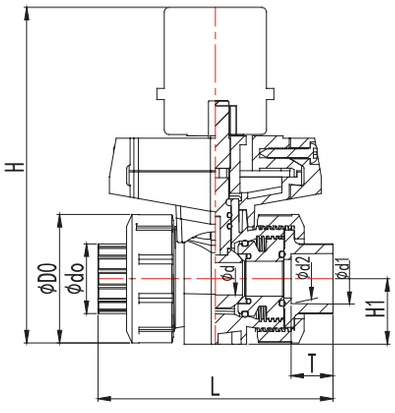

Code	Size DN	Dimensions (mm)								
		D0	d0	d1	d2	d	H1	H	T	L
501030100101	15(20)	51.50	27.40	20.30	19.95	15.50	26.30	201.50	17.00	95.50
501030100102	20(25)	59.00	32.70	25.30	24.95	20.50	30.60	209.00	19.50	109.10
501030100103	25(32)	70.00	41.30	32.30	31.90	26.00	39.10	220.00	23.00	122.60
501030100104	32(40)	85.40	49.60	40.35	39.90	33.00	44.20	235.40	27.00	147.30
501030100105	40(50)	98.90	60.20	50.35	49.90	39.00	52.20	248.90	32.00	158.80
501030100106	50(63)	122.20	76.00	63.40	62.90	51.00	71.30	272.20	38.50	182.80
501030100107	65(75)	158.60	89.60	75.40	74.90	64.00	82.80	353.60	44.50	234.00
501030100108	80(90)	192.10	105.40	90.50	89.90	81.00	99.30	397.10	52.00	255.00
501030100109	100(110)	223.60	128.40	110.60	109.90	99.00	115.20	438.60	62.00	297.00

PVC-U ELECTRIC SOCKET TRUE UNION BALLVALVE ASTM SCH80

Code	Size DN	Dimensions (mm)								
		D	d0	d1	d2	d	H1	H	T	L
501030100201	1/2"	51.50	27.40	21.54	21.23	15.50	26.30	201.50	23.22	107.90
501030100202	3/4"	59.00	32.70	26.87	26.57	20.50	30.60	209.00	26.40	122.90
501030100203	1"	70.00	41.30	33.66	33.27	26.00	39.10	220.00	29.57	135.70
501030100204	1-1/4"	85.40	49.60	42.42	42.04	33.00	44.20	235.40	32.75	158.80
501030100205	1-1/2"	98.90	60.20	48.56	48.11	39.00	52.20	248.90	32.00	166.80
501030100206	2"	122.20	76.00	60.63	60.17	51.00	71.30	272.20	39.10	182.80
501030100207	2-1/2"	158.60	89.60	73.38	72.85	64.00	82.80	353.60	44.50	236.00
501030100208	3"	192.10	105.40	89.31	88.70	81.00	99.30	397.10	48.60	249.00
501030100209	4"	223.60	128.40	114.76	114.07	99.00	115.20	438.60	58.15	289.00

N0.	Name	Quantity	Material
01	Electric Actuator	1	Aluninum alloy/plastic
02	Connector top cover	1	PP
03	Bolt	2	Stainless steel 304
04	Connector bottom cover	1	PP
05	Nut	2	PVC-U
06	Faucet	2	PVC-U
07	Seal Carrier	1	PVC-U
08	Ball Seat	2	PTFE
09	O-ring1	2	EPDM
10	O-ring2	2	EPDM
11	O-ring3	1	EPDM
12	Ball	1	PVC-U
13	O-ring4	2	EPDM
14	Fixed buckle	2	PP
15	Connection	1	PP
16	Bolt	4	Stainless steel 304
17	Body	1	PVC-U

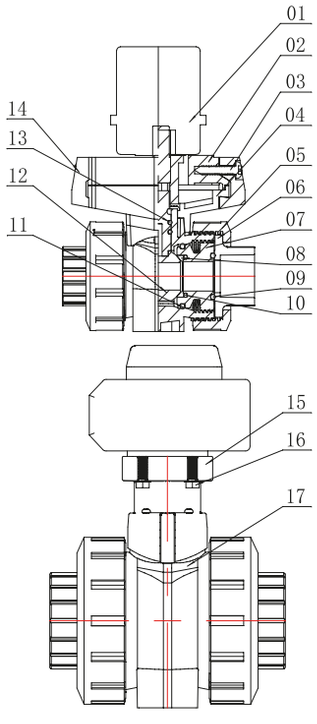

Valve Description

1. Material: PVC-U
2. Size: DN15-100 1/ 2” -4”
3. Standard: DIN, ASTM
4. Connection: Socket
5. Color, Body: Gray

Product Features

1. Switch torque is small.
2. Simple economy.
3. The material is nano-modified to improve the pressure resistance and impact resistance of theproduct.
4. Thickened valve body for high compression resistance.
5. Valve factory 100% pressure test.
6. Optional adjustment, explosion-proof and various voltage actuators.

PVC-U ELECTRIC FLANGED TRUE UNION BALL VALVE



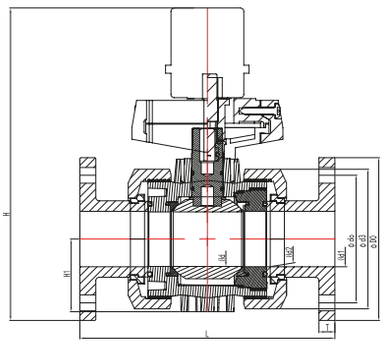

Code	Size DN	Dimensions (mm)								
		D0	d0	d1	d2	d	H1	H	T	L
501030300101	15(20)	95.00	65.00	20.30	19.95	15.50	26.30	223.25	13.00	143.00
501030300102	20(25)	105.00	75.00	25.30	24.95	20.50	30.60	232.00	14.00	172.00
501030300103	25(32)	115.00	85.00	32.30	31.90	26.00	39.10	242.50	15.00	187.00
501030300104	32(40)	140.00	100.00	40.35	39.90	33.00	44.20	262.70	15.00	190.00
501030300105	40(50)	150.00	110.00	50.35	49.90	39.00	52.20	274.45	17.00	212.00
501030300106	50(63)	165.00	125.00	63.40	62.90	51.00	71.30	293.60	17.00	234.00
501030300107	65(75)	185.00	145.00	75.40	74.90	64.00	82.80	366.80	18.00	290.00
501030300108	80(90)	200.00	160.00	90.50	89.90	81.00	99.30	401.05	18.00	310.00
501030300109	100(110)	220.00	180.00	110.60	109.90	99.00	115.20	436.80	18.00	372.00

Valve Description

1. Material:
2. Size: DN15-100
3. Standard: DIN
4. Connection: Flanged
5. Color, Body: Gray

Product Features

1. Switch torque is small.
2. Simple economy.
3. The material is nano-modified to improve the pressure resistance and impact resistance of the product.
4. Thickened valve body for high compression resistance.
5. Valve factory 100% pressure test.
6. Optional adjustment, explosion-proof and various voltage actuators.

NO.	Name	Quantity	Material
01	Electric Actuator	1	Aluninum alloy/plastic
02	Connector top cover	1	PP
03	Bolt	2	Stainless steel 304
04	Connector bottom cover	1	PP
05	Nut	2	PVC-U
06	Flange	2	PVC-U
07	Seal Carrier	1	PVC-U
08	Ball Seat	2	PTFE
09	O-ring1	2	EPDM
10	O-ring2	2	EPDM
11	O-ring3	1	EPDM
12	Ball	1	PVC-U
13	O-ring4	2	EPDM
14	Fixed buckle	2	PP
15	Connection	1	PP
16	Bolt	4	Stainless steel 304
17	Body	1	PVC-U
18	Snap ring	2	PVC-U

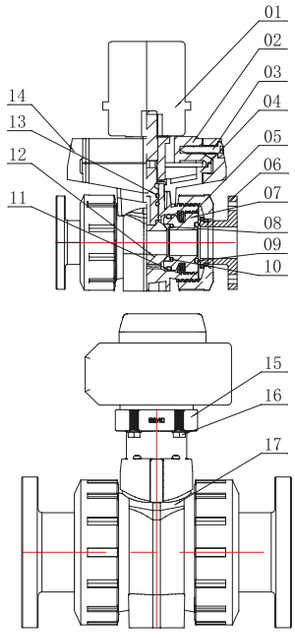

PVC-U ELECTRIC THREADED TRUE UNION BALL VALVE



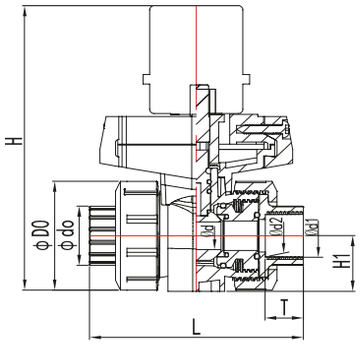

Code	Size DN	Dimensions (mm)								
		D0	d0	d1	d2	d	H1	H	T	L
501030200101	15(20)	51.50	30.43	20.95	18.63	15.50	26.30	201.50	17.00	95.50
501030200102	20(25)	59.00	36.30	26.44	24.12	20.50	30.60	209.00	19.50	109.10
501030200103	25(32)	70.00	44.61	33.25	30.29	26.00	39.10	220.00	23.00	122.60
501030200104	32(40)	85.40	53.87	41.91	38.95	33.00	44.20	235.40	27.00	147.30
501030200105	40(50)	98.90	61.12	47.80	44.85	39.00	52.20	248.90	32.00	158.80
501030200106	50(63)	122.20	73.83	59.61	56.66	51.00	71.30	272.20	38.50	182.80
501030200107	65(75)	158.60	87.71	75.18	74.23	64.00	82.80	353.60	44.50	234.00
501030200108	80(90)	192.10	106.81	87.88	84.93	81.00	99.30	397.10	52.00	255.00
501030200109	100(110)	223.60	133.46	113.03	110.07	99.00	115.20	438.60	62.00	297.00

PVC-U ELECTRIC SOCKET TRUE UNION BALLVALVE ASTM SCH80

Code	Size DN	Dimensions (mm)								
		D0	d0	d1	d2	d	H1	H	T	L
501030200201	1/2"	51.50	30.43	20.95	18.63	15.50	26.30	201.50	17.00	95.50
501030200202	3/4"	59.00	36.30	26.44	24.12	20.50	30.60	209.00	19.50	109.10
501030200203	1"	70.00	44.61	33.25	30.29	26.00	39.10	220.00	23.00	122.60
501030200204	1-1/4"	85.40	53.87	41.91	38.95	33.00	44.20	235.40	27.00	147.30
501030200205	1-1/2"	98.90	61.12	47.80	44.85	39.00	52.20	248.90	32.00	158.80
501030200206	2"	122.20	73.83	59.61	56.66	51.00	71.30	272.20	38.50	182.80
501030200207	2-1/2"	158.60	87.71	75.18	74.23	64.00	82.80	353.60	44.50	234.00
501030200208	3"	192.10	106.81	87.88	84.93	81.00	99.30	397.10	52.00	255.00
501030200209	4"	223.60	133.46	113.03	110.07	99.00	115.20	438.60	62.00	297.00

N0.	Name	Quantity	Material
01	Eletric Actuator	1	Aluninum alloy/plastic
02	Connector top cover	1	PP
03	Bolt	2	Stainless steel 304
04	Connector bottom cover	1	PP
05	Nut	2	PVC-U
06	Faucet	2	PVC-U
07	Seal Carrier	1	PVC-U
08	Ball Seat	2	PTFE
09	O-ring1	2	EPDM
10	O-ring2	2	EPDM
11	O-ring3	1	EPDM
12	Ball	1	PVC-U
13	O-ring4	2	EPDM
14	Fixed buckle	2	PP
15	Connection	1	PP
16	Bolt	4	Stainless steel 304
17	Body	1	PVC-U

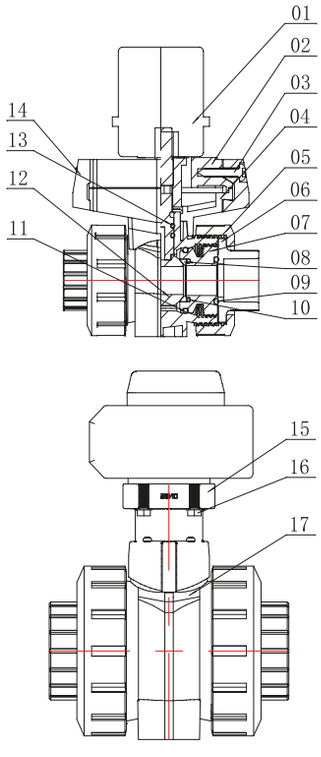

Valve Description

1. Material: PVC-U
2. Size: DN15-100 1/ 2” -4”
3. Standard: DIN, ASTM
4. Connection: Threaded
5. Color, Body: Gray

Product Features

1. Switch torque is small.
2. Simple economy.
3. The material is nano-modified to improve the pressure resistance and impact resistance of theproduct.
4. Thickened valve body for high compression resistance.
5. Factory 100% pressure test.
6. Optional single-acting actuator and various solenoid valves, return position switch.

SOCKET BALL VALVE

NEW



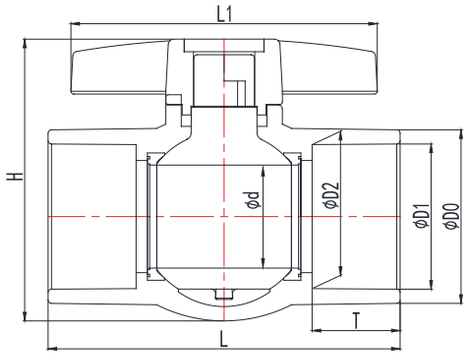

Size DN	Dimensions (mm)								Nominal Pressure PN(kg/cm²)
	D0	D1	D2	d	T	H	L1	L	
20	30.00	20.24	19.96	15.00	17.00	60.00	70.00	74.00	10
25	34.00	25.24	24.95	20.00	19.50	68.00	80.00	85.00	10
32	42.00	32.25	31.95	25.00	23.00	80.00	92.00	98.00	10
40	50.00	40.28	39.95	30.00	27.00	90.00	112.00	112.50	10
50	61.00	50.33	49.94	34.00	32.00	105.00	114.00	128.00	10
63	74.00	63.34	62.93	45.00	38.50	123.00	134.00	154.00	10
75	87.00	75.35	74.93	55.00	44.50	156.00	190.00	176.00	10
90	103.00	90.38	89.93	67.00	52.00	178.00	220.00	203.00	10
110	128.50	110.42	109.92	93.00	62.00	208.50	250.00	260.00	10
160	184.00	160.00	134.00	126	88.5	292.00	250.00	367.00	10

No.	Name	Quantity	Material
01	Handle	1	UPVC
02	Mark cap	1	UPVC
03	Ball	1	PP
04	Valve Body	1	UPVC
05	O-ring	1	NR
06	Ball Seat	2	TPE

Valve Description

1.Material: UPVC
2.Size: De20-110
3.Standard: DIN
4.Connection: socket
5.Color: handle red, body: dark gray

Product Features

1.Meet drinking water standards
2.Switch torque is small
3.Simple economy
4.The material is nano-modified to improve the pressure
5.resistance and impact resistance of the product
6.Thickened valve body for high compression resistance
7.100% Pressure test for valve before leaving factory

THREADED BALL VALVE

NEW



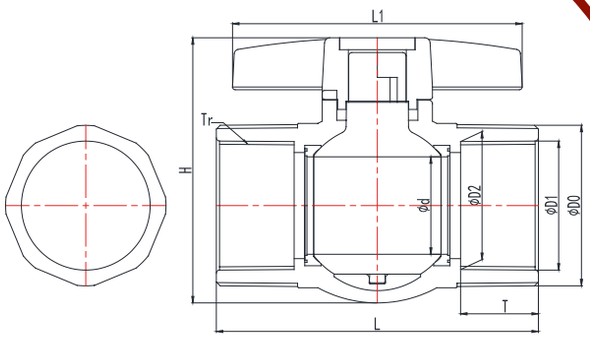

Size DN	Dimensions （mm）									Nominal Pressure PN(kg/cm²)
	D0	D1	D2	d	T	H	L1	L	TR	
20*1/2"	31.60	18.76	18.35	15.00	17.00	60.00	70.00	74.00	10	10
25*3/4"	37.70	24.10	23.90	20.00	19.50	68.00	80.00	85.00	10	10
32*1"	45.50	31.00	30.70	25.00	23.00	80.00	92.00	98.00	10	10
40*1-1/4"	54.80	39.60	39.10	30.00	27.00	90.00	112.00	112.50	10	10
50*1-1/2"	62.00	45.00	44.50	34.00	32.00	105.00	114.00	128.00	10	10
63*2"	74.80	56.60	56.10	45.00	36.00	123.00	134.00	149.00	10	10
75*2-1/2"	92.20	72.20	71.96	55.00	40.00	156.00	190.00	168.00	10	10
90*3"	106.70	85.10	54.40	67.00	48.00	178.00	220.00	195.00	10	10
110*4"	135.20	110.00	109.50	93.00	54.00	208.50	250.00	244.00	10	10

No.	Name	Quantity	Material
01	Handle	1	UPVC
02	Mark cap	1	UPVC
03	Ball	1	PP
04	Valve Body	1	UPVC
05	O-ring	1	NR
06	Ball Seat	2	TPE

Valve Description

1.Material: UPVC
2.Size: De20-110
3.Standard: DIN
4.Connection: socket
5.Color: handle red, body: dark gray

Product Features

5020100102

1.Meet drinking water standards
2.Switch torque is small
3.Simple economy
4.The material is nano-modified to improve the pressure
5.resistance and impact resistance of the product
6.Thickened valve body for high compression resistance
7.100% Pressure test for valve before leaving factory

PVC-U BUTTERFLY VALVE



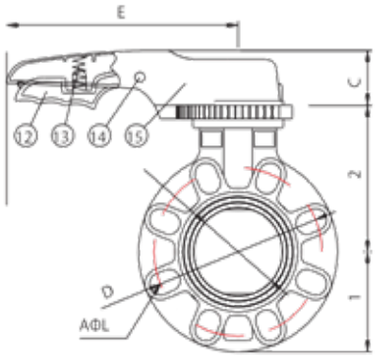

Code	D	Dimensions (mm)								PN
		I	D1	D2	D	C	E	A	L	
5020100101	40(1-1/2)	39	75	100	45	56	220	4	18	PN16
5020100102	50(2")	42	83	110	56	56	220	4	18	PN16
5020100103	65(2-1/2)	46	93	120	69	56	220	4	18	PN16
5020100104	480(3")	46	106	135	77	56	250	8	18	PN16
5020100105	100(4")	56	119	150	102	56	250	8	18	PN16
5020100106	125(5")	66	132	168	129	69	320	8	18	PN16
5020100107	150(6")	71	143	183	150	69	320	8	22	PN16
5020100108	200(8")	87	170	214	195	69	400	8	22	PN16

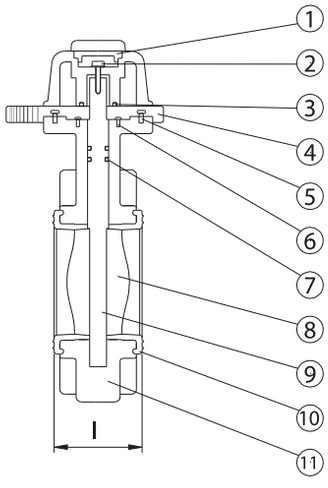

NO.	Name
01	Cap
02	Bolt
03	O-ring
04	Locking Plate
05	Screw
06	Screw
07	O-ring
08	Disc
09	stem
10	Seat
11	Body
12	Hand Lever
13	Spring
14	Pin
15	Handle

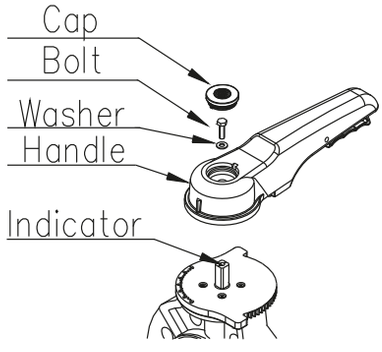

Valve Description

1. Material: PVC-U
2. Size: DN50-200
3. Standard: DIN
4. Connection: Flange
5. Color: handle red, Body: dark gray

Product Features

1. Meet drinking water standards.
2. Switch torque is small.
3. Parts can be replaced, simple and economical.
4. The material is nano-modified to improve the pressure resistance and impact resistance of the product.
5. Thickened valve body for high compression resistance.
6. Valve factory 100% pressure test.
7. And a sealing body specially treated, better performance.
8. Galvanized steel stem, it can be replaced with Stainless steel 304 or 316 upon request for higher performance .

PVC-U BUTTERFLY GEAR BOX VALVE



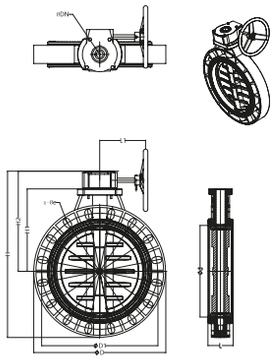

CODE	DN	Dimensions (mm)										Nominal Pressure PN(kg/cm²)
		D	D1	d	L	DN	L1	H1	H2	H	n-Φe	
5020100201	100(110)	229.60	180.00	111.90	46.00	70.00	216.00	156.20	205.15	320.00	8-19	PN16
5020100202	125(140)	255.00	210.00	137.90	53.00	70.00	216.00	174.00	222.90	350.40	8-19	PN16
5020100203	150(160)	281.50	240.00	157.35	59.40	70.00	216.00	190.00	250.63	391.35	8-23	PN16
5020100204	200(225)	342.60	295.00	214.20	76.00	70/102	190.00	229.00	299.00	470.00	8-23	PN16
5020100205	250(280)	409.65	355.00	250.00	85.00	102.00	190.00	264.00	334.00	540.00	12-22	PN16
5020100206	300(315)	483.55	400.00	290.00	92.00	102.00	190.00	301.50	371.50	613.00	12-22	PN10 - PN16
5020100207	350(355)	510.00	450.00	370.00	95.00	102.00	190.00	330.00	410.00	660.00	16-27	PN10 - PN16
5020100208	400(400)	570.00	500.00	420.00	95.00	140.00	190.00	360.00	440.00	730.00	16-30	PN10 - PN16
5020100209	450(450)	630.00	560.00	446.00	150.00	140.00	280.00	380.00	490.00	770.00	20-26	PN10 - PN16
5020100210	500(500)	700.00	620.00	494.00	150.00	140.00	280.00	400.00	530.00	810.00	20-26	PN10
5020100211	600(600)	815.00	730.00	590.00	170.00	140.00	280.00	450.00	600.00	915.00	20-26	PN10

NO.	Name	Quantity	Material
01	Body	1	PVC-U
02	Disc	1	PVC-U
03	Seat seal	1	EPDM
04	O-ring	3	EPDM
05	Shaft	1	STEEL
06	Key pin	1	STEEL
07	Gear	1	STEEL

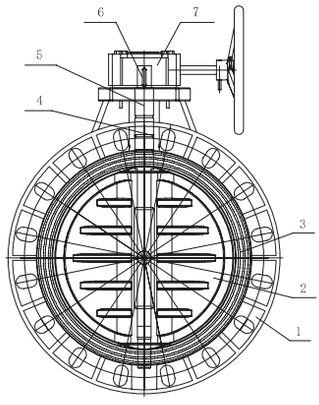

Valve Description

1. Material: PVC-U
2. Size: DN100-400
3. Standard: DIN
4. Connection: Flange
5. Color: turbine head black, Body: dark gray

Product Features

1. Meet drinking water standards.
2. Switch torque is small.
3. Parts can be replaced, simple and economical.
4. The material is nano-modified to improve the pressure resistance and impact resistance of the product.
5. Thickened valve body for high compression resistance.
6. Valve factory 100% pressure test.
7. And a sealing body specially treated, better performance.

DOUBLE UNION CHECK VALVE METRIC - PLAIN



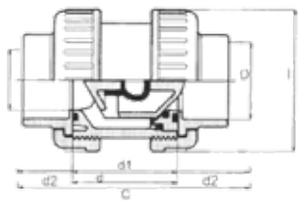

Code	Dimensions (mm)					
	D	I	D1	D2	D	C
5030100801	20	50	42	16	48	80
5030100802	25	59	48	19	53	91
5030100803	32	68	54	22	58	102
5030100804	40	80	62	26	68	120
5030100805	50	94	72	31	78	140
5030100806	63	115	86	38	93	169
5030100807	75	145	110	44	118	206
5030100808	90	168	128	51	140	242

DOUBLE UNION CHECK VALVE IMPERIAL - THREADED



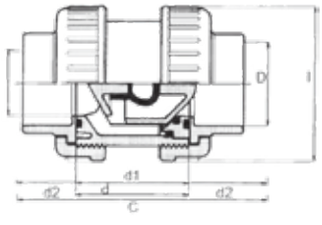

Code	Dimensions (mm)					
	D	I	D1	D2	D	C
5030100901	1/2"	50	42	16	48	80
5030100902	3/4"	59	48	19	53	91
5030100903	1"	68	54	22	58	102
5030100904	1-1/4"	80	62	26	68	120
5030100905	1-1/2"	94	72	31	78	140
5030100906	2"	115	86	38	93	169
5030100907	2-1/2"	145	110	44	118	206
5030100908	3"	168	128	51	140	242

PVC-U GATE CHECK VALVE

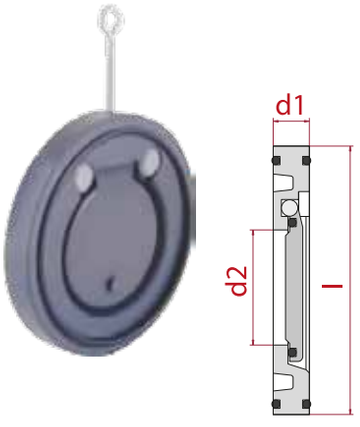

Code	Dimensions (mm)			
	D	I	D1	D2
5030200101	63	109	20	32
5030200102	75	129	20	40
5030200103	90	144	20	52
5030200104	110	164	22	70
5030200105	125	170	25	83
5030200106	140	195	23	92
5030200107	160	220	25	112
5030200108	200	247	28	139

PVC-U GATE CHECK VALVE WITH STAINLESS ST GATE

NEW



Code	D	Dimensions (mm)			
		I	D1	D2	PN
5030200110	63	109	20	32	16
5030200111	75	129	20	40	16
5030200112	90	144	20	52	16
5030200113	110	164	22	70	16
5030200114	125	170	25	83	16
5030200115	140	195	23	92	16
5030200116	160	220	25	112	16
5030200117	200	247	28	139	16

PVC-U FLANGED DIAPHRAGM VALVE



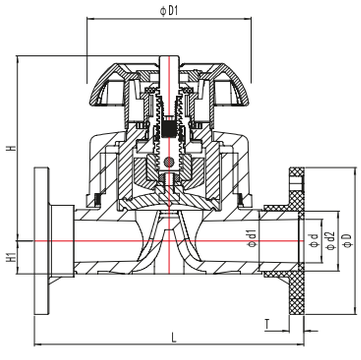

Code	Size DN	Dimensions (mm)									
		D	D1	d	H1	H	T	L	Flange Center	Flange Hole	Flange Aperture
503030300101	15(20)	95.00	80.00	16.00	14.00	90.00	13.00	121.00	65.00	14.00	4
503030300102	20(25)	105.00	80.00	21.00	18.00	102.00	14.00	142.00	75.00	14.00	4
503030300103	25(32)	115.00	94.00	28.00	21.00	119.00	15.00	151.00	85.00	14.00	4
503030300104	32(40)	140.00	117.00	36.00	26.00	126.00	15.00	169.00	100.00	16.00	4
503030300105	40(50)	150.00	117.00	45.00	33.00	139.00	17.00	193.00	110.00	16.00	4
503030300106	50(63)	165.00	152.00	57.00	39.00	172.00	17.00	227.00	125.00	19.00	4
503030300107	65(75)	185.00	151.60	85.00	91.00	173.00	17.00	290.00	145.00	19.00	4
503030300108	80(90)	197.00	263.00	85.00	109.00	226.00	18.00	310.00	160.00	19.00	8
503030300109	100(110)	220.00	263.00	106.00	134.00	234.00	20.00	350.00	180.00	19.00	8
503030300110	125(140)	250.00	263.00	106.00	134.00	234.00	22.00	350.00	210.00	22.00	8
503030300111	150(160)	286.00	392.60	150.00	212.00	333.00	24.00	480.00	240.00	22.00	8

Valve Description

1. Material: PVC-U
2. Size: DN15-150
3. Standard: DIN
4. Connection: Flanged
5. Color: The body is gray, the bonnet is yellow, and the handle is black.

Product Features

1. Switch torque is small.
2. Simple economy.
3. The material is nano-modified to improve the pressure resistance and impact resistance of the product.
4. Thickened valve body for high compression resistance.
5. Valve factory 100% pressure test.
6. The body and seal are specially treated for better performance Actuator performs 500,000 opening and closing tests.

N0.	Name	Quantity	Material
01	Body(DIN)	1	PVC-U
02	Diaphragm	1	EPDM
03	Diaphragm water seal sleeve	1	PP
04	Hex bolt	1	Stainless steel 304
05	Hex nut	1	Stainless steel 304
06	Disc insert	1	Brass（H62)
07	Indicator stem(both insert)	1	PP
08	Cover	1	PP
09	Jump ring	1	Spring steel
10	Handwheel	1	PP/PA6
11	Body nut	1	PA6
12	Stem	1	Stainless steel 304
13	pins	1	Stainless steel 304
14	Stem screw insert	1	Brass（H62)
15	Stem screw	1	PPS
16	Disc	1	PPS
17	One Piece Flange	2	PVC-U
18	(DN65-DN150) Transparent cover	1	PC
19	(DN65-DN150) Handwheel	1	PA6
20	Flanged body	1	PVC-U

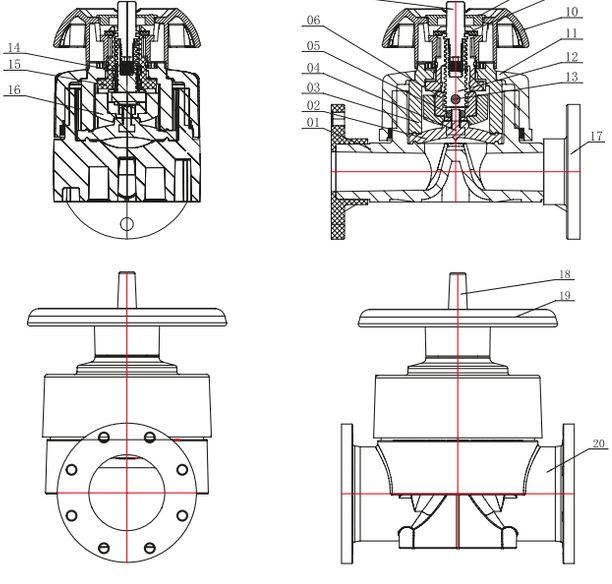



PVC-U SOCKET DIAPHRAGM VALVE



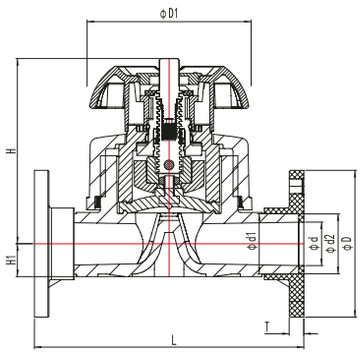

Code	Size DN	Dimensions (mm)							
		D1	d1	d2	d	H1	H	T	L
503030100101	15(20)	65.00	20.30	19.95	20.10	14.00	90.00	16.50	124.00
503030100102	20(25)	65.00	25.30	24.95	25.10	18.00	102.00	19.00	144.00
503030100103	25(32)	93.50	32.30	31.90	32.10	21.00	119.00	22.50	154.00
503030100104	32(40)	93.50	40.35	39.90	40.15	26.00	126.00	26.50	174.00
503030100105	40(50)	121.00	50.35	49.90	50.15	33.00	139.00	31.50	194.00
503030100106	50(63)	121.00	63.40	62.90	63.20	39.00	172.00	36.70	234.00

Code	Size DN	Dimensions (mm)							
		D1	d1	d2	D	H1	H	T	L
503030100201	1/2"	65.00	21.54	21.23	21.34	14.00	90.00	23.22	124.00
503030100202	3/4"	65.00	26.87	26.57	26.67	18.00	102.00	26.40	144.00
503030100203	1"	93.50	33.66	33.27	33.40	21.00	119.00	29.57	154.00
503030100204	1-1/4"	93.50	42.42	42.04	42.16	26.00	126.00	32.75	174.00
503030100205	1-1/2"	121.00	48.56	48.11	48.26	33.00	139.00	35.93	194.00
503030100206	2"	121.00	60.63	60.17	60.33	39.00	172.00	39.10	234.00

Valve Description

1. Material: PVC-U
2. Size: Size: DN15-50 1/ 2" -2"
3. Standard: DIN, ASTM
4. Connection: Socket
5. Color: body gray, bonnet yellow, handle black

Product Features

1. Switch torque is small.
2. Simple economy.
3. The material is nano-modified to improve the pressure resistance and impact resistance of theproduct.
4. Thickened valve body for high compression resistance.
5. Factory 100% pressure test.
6. The body and seal are specially treated for better performance actuator performs 500,000 opening and closing tests.

N0.	Name	Quantity	Material
01	Body(DIN)	1	PVC-U
02	Diaphragm	1	EPDM
03	Diaphragm water seal sleeve	1	PP
04	Hex bolt	1	Stainless steel 304
05	Hex nut	1	Stainless steel 304
06	Disc insert	1	Brass (H62)
07	Indicator stem(both insert)	1	PP
08	Cover	1	PP
09	Jump ring	1	Spring steel
10	Handwheel	1	PP/PA6
11	Body nut	1	PA6
12	Stem	1	Stainless steel 304
13	pins	1	Stainless steel 304
14	Stem screw insert	1	Brass（H62)
15	Stem screw	1	PPS
16	Disc	1	PPS

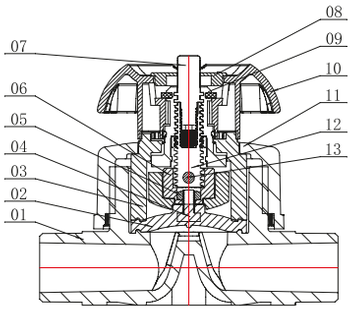

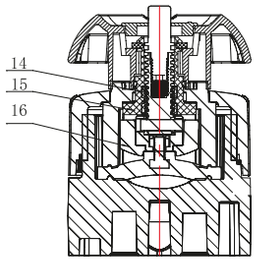

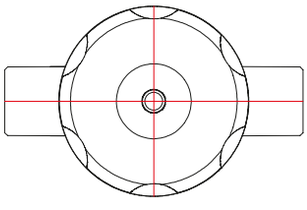



PVC-U TRUE UNION DIAPHRAGM VALVE



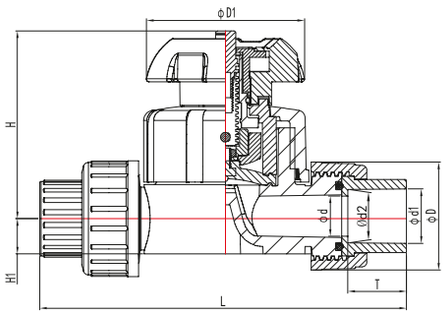

Code	Size DN	Dimensions (mm)								
			D1	d1	d2	d	H1	H	T	L
501010100301	15(20)	46.50	65.00	20.30	19.95	16.00	14.00	90.00	16.50	128.00
501010100302	20(25)	53.50	65.00	25.30	24.95	20.00	18.00	102.00	19.00	152.00
501010100303	25(32)	64.00	93.50	32.30	31.90	26.00	21.00	119.00	22.50	166.00
501010100304	32(40)	74.50	93.50	40.35	39.90	34.00	26.00	126.00	26.50	192.00
501010100305	40(50)	85.00	121.00	50.35	49.90	43.00	33.00	139.00	31.50	222.00
501010100306	50(63)	100.00	121.00	63.40	62.90	56.00	39.00	172.00	36.70	266.00

Code	Size DN	Dimensions (mm)								
		D	D1	d1	d2	d	H1	H	T	T
501010100401	1/2"	46.50	65.00	21.54	21.23	16.00	14.00	90.00	23.22	141.00
501010100402	3/4"	53.50	65.00	26.87	26.57	20.00	18.00	102.00	26.40	166.80
501010100403	1"	64.00	93.50	33.66	33.27	26.00	21.00	119.00	29.57	180.00
501010100404	1-1/4"	74.50	93.50	42.42	42.04	34.00	26.00	126.00	32.75	204.00
501010100405	1-1/2"	85.00	121.00	48.56	48.11	43.00	33.00	139.00	35.93	231.00
501010100406	2"	100.00	121.00	60.63	60.17	56.00	39.00	172.00	39.10	272.00

Valve Description

1. Material: PVC-U
2. Size: DN15-50 1/ 2" -2"
3. Standard: DIN, ASTM
4. Connection: Socket
5. Color: body gray, bonnet yellow, handle black

Product Features

1. Switch torque is small.
2. Parts can be replaced, simple & economical.
3. The material is nano-modified to improve the pressure resistance and impact resistance of theproduct.
4. Thickened valve body for high compression resistance.
5. Valve factory 100% pressure test.

N0.	Name	Quantity	Material
01	Faucet nut	1	PVC-U
02	O-ring	1	EPDM
03	Faucet(DIN)	1	PVC-U
04	Body(DIN)	1	PVC-U
05	Diaphragm	1	EPDM
06	Diaphragm water seal sleeve	1	PP
07	Hex bolt	1	Stainless steel 304
08	Hex nut	1	Stainless steel 304
09	Disc insert	1	Brass (H62)
10	Indicator stem(both insert)	1	PP
11	Handwheel	1	PP/PA6
12	Body nut	1	PA6
13	Stem	1	Stainless steel 304
14	pins	1	Stainless steel 304
15	Cover	1	PP
16	Jump ring	1	Spring steel
17	Stem screw insert	2	Brass (H62)
18	Stem screw	1	PPS
19	Disc	1	PPS

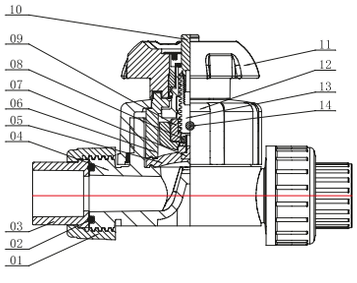

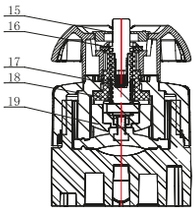

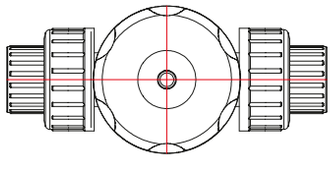



PVC-U SOCKET TRUE UNION CHECK VALVE



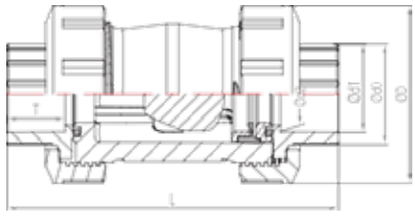

Code	Size DN	Dimensions (mm)						Nominal Pressure PN(kg/cm²)
		D	d0	d1	d2	T	L	
503010100101	15(20)	51.50	27.40	20.30	19.95	17.00	95.80	PN10
503010100102	20(25)	59.00	32.70	25.30	24.95	19.50	109.60	PN10
503010100103	25(32)	70.00	41.30	32.30	31.90	23.00	123.10	PN10
503010100104	32(40)	85.40	49.60	40.35	39.90	27.00	150.00	PN10
503010100105	40(50)	98.90	60.20	50.35	49.90	32.00	161.20	PN10
503010100106	50(63)	122.20	76.00	63.40	62.90	38.50	186.00	PN10
503010100107	65(75)	158.60	89.60	75.40	74.90	44.50	236.00	PN10
503010100108	80(90)	192.10	105.40	90.50	89.90	52.00	255.00	PN10
503010100109	100(110)	223.60	128.40	110.60	109.90	62.00	298.60	PN10

Code	Size DN	Dimensions mm					
		D	d0	d1	d2	T	L
503010100201	1/2"	51.50	27.40	21.54	21.23	23.30	108.40
503010100202	3/4"	59.00	32.70	26.87	26.57	26.50	123.60
503010100203	1"	70.00	41.30	33.66	33.27	29.70	136.50
503010100204	1-1/4"	85.40	49.60	42.42	42.04	32.90	161.80
503010100205	1-1/2"	98.90	60.20	48.56	48.11	36.10	169.40
503010100206	2"	122.20	76.00	60.63	60.17	39.30	187.60
503010100207	2-1/2"	158.60	89.60	73.38	72.85	45.70	237.20
503010100208	3"	192.10	105.40	89.31	88.70	48.90	248.80
503010100209	4"	223.60	128.40	114.76	114.07	58.40	291.40

N0.	Name	Quantity	Material
01	Faucet	2	PVC-U
02	Nut	2	PVC-U
03	Body	1	PVC-U
04	Washer	1	PVC-U
05	Rubber ring	1	EPDM/FPM
06	Location Ring	1	PVC-U
07	Ball	1	PVC-U
08	O-Ring	2	EPDM/FPM

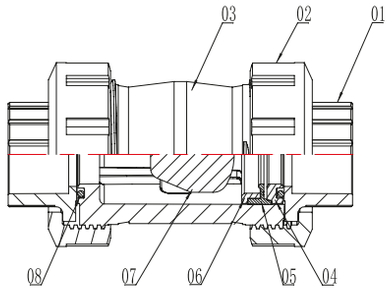



Valve Description

1. Material: PVC-U
2. Size: DN15-100 1/ 2” -4”
3. Standard: DIN, ASTM
4. Connection: Socket
5. Color: Dark Gray

Product Features

1. Simple economy.
2. The material is nano-modified to improve the pressure resistance and impact resistance of theproduct.
3. Thickened valve body for high compression resistance.
4. Valve factory 100% pressure test.
5. The body and seal are specially treated for better performance actuator performs 500,000 opening and closing tests

PVC-U THREADED TRUE UNION CHECK VALVE



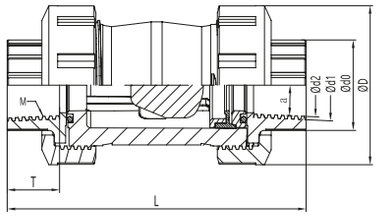

Code	Size DN	Dimensions (mm)								Nominal Pressure PN(kg/cm²)
		D	d0	d1	d2	T	L	Tr	s	
503010100101	15(20)	51.50	27.40	20.95	18.63	17.00	95.80	1/2"	3.58	PN10
503010100102	20(25)	59.00	32.70	26.44	24.12	19.50	109.58	3/4"	3.58	PN10
503010100103	25(32)	70.00	41.30	33.25	30.29	23.00	123.10	1"	3.58	PN10
503010100104	32(40)	85.40	49.60	41.91	38.95	27.00	147.50	1-1/4"	3.58	PN10
503010100105	40(50)	98.90	60.20	47.80	44.85	32.00	159.50	1-1/2"	3.58	PN10
503010100106	50(63)	122.20	76.00	59.61	56.66	38.50	184.80	2"	3.58	PN10
503010100107	65(75)	158.60	89.60	75.18	74.23	44.50	233.50	2-1/2"	3.58	PN10
503010100108	80(90)	192.10	105.40	87.88	84.93	52.00	255.00	3"	3.58	PN10
503010100109	100(110)	223.60	128.40	113.03	110.07	62.00	297.50	4"	3.58	PN10

Code	Size DN	Dimensions (mm)								Nominal Pressure PN(kg/cm²)
		D	d0	d1	d2	T	L	Tr	s	
503010100201	1/2"	51.50	27.40	20.95	18.63	17.00	95.80	1/2"	3.58	PN10
503010100202	3/4"	59.00	32.70	26.44	24.12	19.50	109.58	3/4"	3.58	PN10
503010100203	1"	70.00	41.30	33.25	30.29	23.00	123.10	1"	3.58	PN10
503010100204	1-1/4"	85.40	49.60	41.91	38.95	27.00	147.50	1-1/4"	3.58	PN10
503010100205	1-1/2"	98.90	60.20	47.80	44.85	32.00	159.50	1-1/2"	3.58	PN10
503010100206	2"	122.20	76.00	59.61	56.66	38.50	184.80	2"	3.58	PN10
503010100207	2-1/2"	158.60	89.60	75.18	74.23	44.50	233.50	2-1/2"	3.58	PN10
503010100208	3"	192.10	105.40	87.88	84.93	52.00	255.00	3"	3.58	PN10
503010100209	4"	223.60	128.40	113.03	110.07	62.00	297.50	4"	3.58	PN10

NO.	Name	Quantity	Material
01	Faucet	2	PVC-U
02	Nut	2	PVC-U
03	Body	1	PVC-U
04	Washer	1	PVC-U
05	Rubber ring	1	EPDM
06	Location Ring	1	PVC-U
07	Ball	1	PVC-U
08	O-Ring	2	EPDM

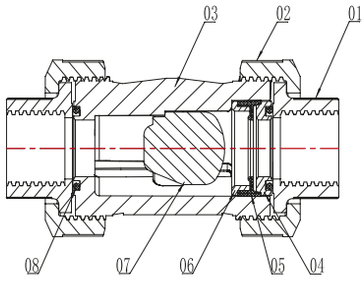

Valve Description

1. Material: PVC-U
2. Size: DN15-100 1/ 2" -4"
3. Standard: DIN, ASTM
4. Connection: Threaded
5. Color: Dark Gray

Product Features

1. Simple economy.
2. The material is nano-modified to improve the pressure resistance and impact resistance of theproduct.
3. Thickened valve body for high compression resistance.
4. Valve factory 100% pressure test.
5. The body and seal are specially treated for better performance actuator performs 500,000 opening and closing tests

PVC-U FLANG TRUE UNION CHECK VALVE



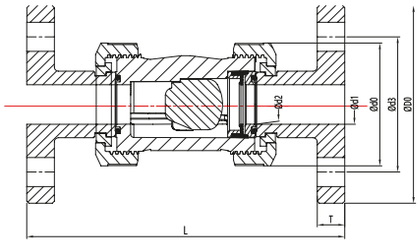

Code	Size DN	Dimensions (mm)							Nominal Pressure PN(kg/cm²)
		D0	d0	d1	d2	d3	T	L	
503010300101	15(20)	95.00	51.50	20.30	19.95	65.00	13.00	141.60	PN10
503010300102	20(25)	105.00	59.00	25.30	24.95	75.00	14.00	171.50	PN10
503010300103	25(32)	115.00	70.00	32.30	31.90	85.00	15.00	188.50	PN10
503010300104	32(40)	140.00	85.40	40.35	39.90	100.00	15.00	187.50	PN10
503010300105	40(50)	150.00	98.90	50.35	49.90	110.00	17.00	215.00	PN10
503010300106	50(63)	165.00	122.20	63.40	62.90	125.00	17.00	235.00	PN10
503010300107	65(75)	185.00	158.60	75.40	74.90	145.00	18.00	288.50	PN10
503010300108	80(90)	200.00	192.10	90.50	89.90	160.00	18.00	310.00	PN10
503010300109	100(110)	220.00	223.60	110.60	109.90	180.00	18.00	375.00	PN10

Valve Description

1. Material: PVC-U
2. Size: DN15-100
3. Standard: DIN
4. Connection: Flanged
5. Color: Dark Gray

Product Features

1. Simple economy.
2. The material is nano-modified to improve the pressure resistance and impact resistance of theproduct.
3. Thickened valve body for high compression resistance.
4. Valve factory 100% pressure test.
5. The body and seal are specially treated for better performance actuator performs 500,000 opening and closing tests.

N0.	Name	Quantity	Material
01	Flange	2	PVC-U
02	Nut	2	PVC-U
03	Body	1	PVC-U
04	Clamp Ring	2	PVC-U
05	Washer	1	PVC-U
06	Rubber Ring	1	EPDM
07	Located Ring	1	PVC-U
08	Ball	1	PVC-U
09	O-ring	2	EPDM

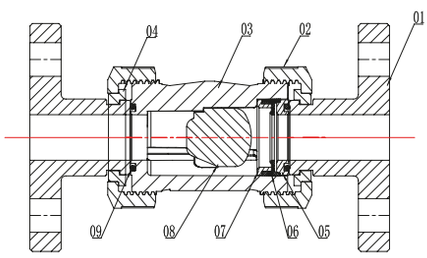



PVC-U SWING SPRING CHECK VALVE



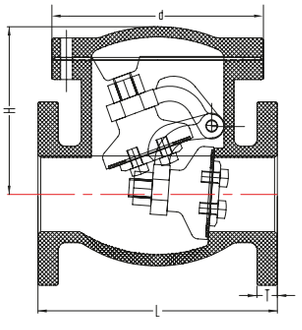

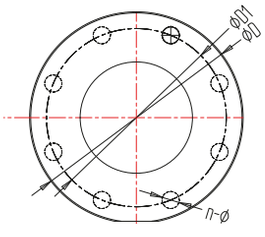

Code	Size DN	Dimensions (mm)							Nominal Pressure PN(kg/cm²)
		D	D1	L	T	H	d	n-Φe	
503010300201	15	100	65	140	15	93	87	4-Φ14	PN16
503010300202	20	100	75	140	15	93	87	4-Φ14	PN16
503010300203	25	120	85	160	15	117	130	4-Φ18	PN16
503010300204	32	140	100	180	19	137	146	4-Φ18	PN16
503010300205	40	140	110	180	19	137	146	4-Φ18	PN16
503010300206	50	165	125	200	20	156	167	4-Φ18	PN16
503010300207	65	185	145	240	22	170.2	203	4-Φ18	PN16
503010300208	80	200	160	260	22	181	230	8-Φ18	PN16
503010300209	100	224	180	300	24	216	278	8-Φ18	PN16
503010300210	125	254	210	300	24	216	278	8-Φ18	PN16
503010300211	150	285	240	400	26	286	394	8-Φ23	PN16
503010300212	200	324	295	500	30	336	476	8-Φ23	PN16

Code	Size DN	Dimensions (mm)							Nominal Pressure PN(kg/cm²)
		D	D1	L	T	H	d	n-Φe	
503010300301	1/2"	100	60	140	15	93	87	4-Φ16	PN16
503010300302	3/4"	100	70	140	15	93	87	4-Φ16	PN16
503010300303	1"	120	79	160	15	117	130	4-Φ16	PN16
503010300304	1-1/4"	140	88.9	180	19	137	146	4-Φ16	PN16
503010300305	1-1/2"	140	98	180	19	137	146	4-Φ16	PN16
503010300306	2"	165	121	200	20	156	167	4-Φ19	PN16
503010300307	2-1/2"	185	140	240	22	170.2	203	4-Φ19	PN16
503010300308	3"	200	152	260	22	181	230	4-Φ19	PN16
503010300309	4"	224	191	300	24	216	278	8-Φ19	PN16
503010300310	5"	254	216	300	24	216	278	8-Φ22	PN16
503010300311	6"	285	241	400	26	286	394	8-Φ22	PN16
503010300312	8"	324	298	500	30	336	476	8-Φ22	PN16

NO.	Name	Quantity	Material
01	End Cover	1	PVC-U
02	1 Gasket 1	1	EPDM
03	Body	1	PVC-U
04	Hinge	1	PVC-U
05	Pin	1	PTFE
06	Hexagon Bolt	1—4	PVC-U
07	Coverplate	1	PVC-U
08	2 Gasket 2	1	EPDM
09	Flap	1	PVC-U
10	Nut	1	PVC-U
11	Hexagon Nut	8—12	Stainless steel 304
12	Spring Washer	8—12	Stainless steel 304
13	Plain Washer	16—24	Stainless steel 304
14	Hexagon Bolt	8—12	Stainless steel 304

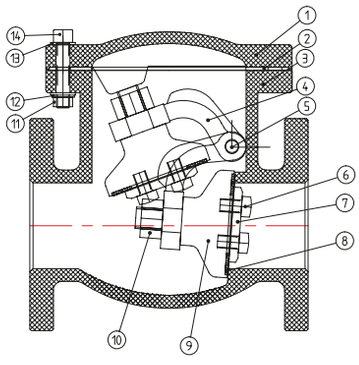

Valve Description

1. Material: PVC-U
2. Size: DN15-200 1/ 2” -8”
3. Standard: DIN, ASTM
4. Connection: Flanged
5. Color: Dark Gray







Product Features

1. Simple economy.
2. The material is nano-modified to improve the pressure resistance and impact resistance of theproduct.
3. Thickened valve body for high compression resistance.
4. Valve factory 100% pressure test.
5. The body and seal are specially treated for better performance actuator performs 500,000 opening and closing tests

PVC-U SINGLE UNION CHECK VALVE



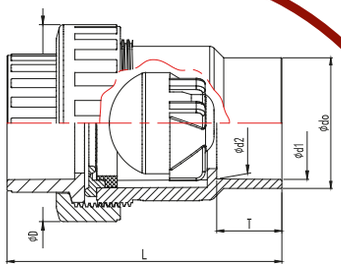

Code	Size DN	Dimensions (mm)						Nominal Pressure PN(kg/cm²)	Minimum Opening Pressure PN(kg/cm²)
		D	d0	d1	d2	T	L		
503010100301	15(20)	47.00	26.90	20.30	19.95	16.50	77.50	PN10	0.1 5-0.3
503010100302	20(25)	53.90	32.50	25.30	24.95	19.00	94.50	PN10	0.15-0.3
503010100303	25(32)	67.00	40.30	32.30	31 .90	22.50	111.00	PN10	0.15-0.3
503010100304	32(40)	78.50	49.40	40.35	39.90	26.50	129.00	PN10	0.1 5-0.3
503010100305	40(50)	93.20	61.60	50.35	49.90	31.50	143.00	PN10	0.1 5-0.3
503010100306	50(63)	110.60	73.40	63.40	62.90	36.70	154.70	PN10	0.15-0.3
503010100307	65(75)	130.60	89.60	75.40	74.90	44.00	185.40	PN10	0.1 5-0.3
503010100308	80(90)	148.40	105.50	90.50	89.90	51.50	21 3.70	PN10	0.15-0.3
503010100309	100(110)	173.40	126.50	110.60	109.90	61.50	238.40	PN10	0.15-0.3

Valve Description

1. Material: PVC-U
2. Size: DN15-100
3. Standard: DIN
4. Connection: Socket
5. Color: Dark Gray

Product Features

1. Meet drinking water standards.
2. Solid inner ball, good water stop effect.
3. Parts can be replaced, simple and economical.
4. The material is nano-modified to improve the pressure resistance and impact resistance of the product.
5. Thickened valve body for high compression resistance.
6. Valve factory 100% pressure test.

N0.	Name	Quantity	Material
01	Faucet	1	PVC-U
02	Nut	1	PVC-U
03	Rubber Ring	1	EPDM
04	Located Ring	1	PVC-U
05	Ball	1	PVC-U
06	Body	1	PVC-U

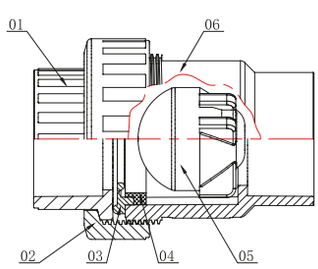



PVC-U SINGLE UNION BOTTOM VALVE



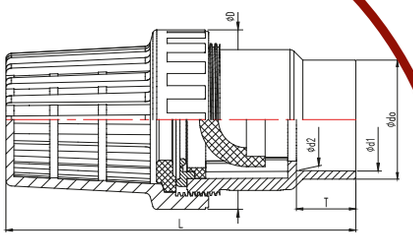

Code	Size DN	Dimensions (mm)						Nominal Pressure PN(kg/cm²)	Minimum Opening Pressure PN(kg/cm²)
		D	d0	d1	d2	T	L		
503010100401	15(20)	47.00	27.90	20.30	19.96	16.50	113.00	PN10	0.15-0.3
503010100402	20(25)	53.90	32.50	25.30	24.95	19.00	132.40	PN10	0.15-0.3
503010100403	25(32)	67.00	40.30	32.30	31.90	22.50	145.70	PN10	0.15-0.3
503010100404	32(40)	78.50	49.30	40.35	39.90	26.50	177.40	PN10	0.15-0.3
503010100405	40(50)	93.00	61.60	50.35	49.90	31.50	201.60	PN10	0.15-0.3
503010100406	50(63)	110.60	74.00	63.40	62.90	36.70	215.80	PN10	0.15-0.3

Valve Description

1. Material: PVC-U
2. Size: DN15-50
3. Standard: DIN
4. Connection: Socket
5. Color: Dark Gray

Product Features

1. Meet drinking water standards.
2. U-shaped inner ball, good water stop effect.
3. Parts can be replaced, simple and economical.
4. The material is nano-modified to improve the pressure resistance and impact resistance of the product.
5. Thickened valve body for high compression resistance.
6. Valve factory 100% pressure test.

N0.	Name	Quantity	Material
01	Wash Enclosure	1	PVC-U
02	Washer	1	PVC-U
03	Ring	1	EPDM
04	Located Ring	1	PVC-U
05	Ball	1	PVC-U
06	Body	2	PVC-U

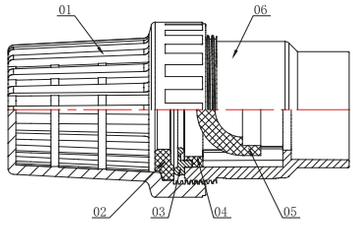





PVC-U SWINGING CHECK VALVE

NEW



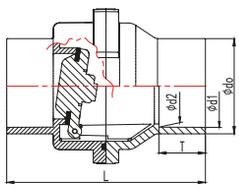

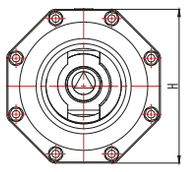

Code	Size DN	Dimensions (mm)						Nominal Pressure PN(kg/cm²)	Minimum Opening Pressure PN(kg/cm²)
		d0	d1	d2	T	L	H		
503010100501	65(75)	88.20	75.40	74.90	43.70	207.10	169.00	PN6	0.15-0.3
503010100502	80(90)	104.60	90.50	89.90	51.20	218.70	169.00	PN6	0.15-0.3
503010100503	100(110)	125.40	110.60	109.90	61.20	268.00	206.00	PN6	0.15-0.3
503010100504	De125(125)	145.50	125.70	124.90	68.70	283.00	206.00	PN6	0.15-0.3
503010100505	125(140)	164.00	140.75	139.90	76.30	369.30	285.00	PN6	0.15-0.3
503010100506	150(160)	186.00	160.80	159.90	87.00	390.00	285.00	PN6	0.15-0.3

Valve Description

1. Material: PVC-U
2. Size: DN65-150
3. Standard: DIN
4. Connection: Socket
5. Color: Dark Gray

Product Features

1. Meet drinking water standards.
2. Parts can be replaced, simple and economical.
3. The material is nano-modified to improve the pressure resistance and impact resistance of the product.
4. Thickened valve body for high compression resistance.
5. Valve factory 100% pressure test.

N0.	Name	Quantity	Material
01	Body	1	PVC-U
02	Ring1	1	EPDM
03	Trap	1	PVC-U
04	Ring2	1	EPDM
05	Cover	1	PVC-U
06	Bolt	8	Stainless steel
07	Nut	8	Stainless steel
08	Gasket	8	Stainless steel

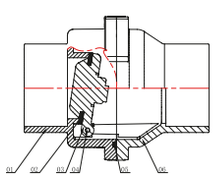

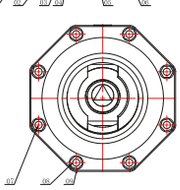



PVC-U SWINGING BOTTOM VALVE

NEW



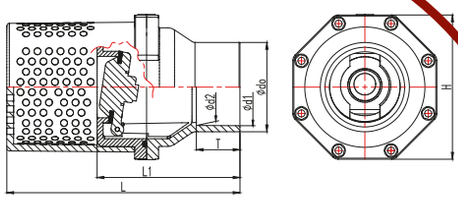

Code	Size DN	Dimensions (mm)							Nominal Pressure PN(kg/cm²)	Minimum Opening Pressure PN(kg/cm²)
		d0	d1	d2	T	L1	L	H		
503010100601	65(75)	88.20	75.40	74.90	43.70	160.00	266.00	169.00	PN6	0.15-0.3
503010100602	80(90)	104.60	90.50	89.90	51.20	167.50	273.50	169.00	PN6	0.15-0.3
503010100603	100(110)	125.40	110.60	109.90	61.20	218.00	379.00	206.00	PN6	0.15-0.3
503010100604	De125(125)	145.50	125.70	124.90	68.70	215.50	386.50	206.00	PN6	0.15-0.3
503010100605	125(140)	164.00	140.75	139.90	76.30	294.80	496.30	285.00	PN6	0.15-0.3
503010100606	150(160)	186.00	160.80	159.90	87.00	304.50	505.80	285.00	PN6	0.15-0.3

Valve Description

1. Material: PVC-U
2. Size: DN65-150
3. Standard: DIN
4. Connection: Socket
5. Color: Dark Gray

Product Features

1. Meet drinking water standards.
2. Parts can be replaced, simple and economical.
3. The material is nano-modified to improve the pressure resistance and impact resistance of the product.
4. Thickened valve body for high compression resistance.
5. Valve factory 100% pressure test.

N0.	Name	Quantity	Material
01	Drain Body	1	PVC-U
02	Body	1	PVC-U
03	Ring1	1	EPDM
04	Trap	1	PVC-U
05	Fixed Block	2	PVC-U
06	Ring2	1	EPDM
07	Cover	1	PVC-U
08	Sit Bolt	12	Stainless steel
09	Nut	12	Stainless steel
10	Gasket	12	Stainless steel

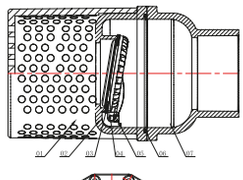

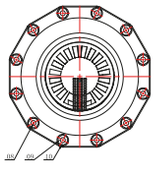



PVC-U SAMPLING VALVE

NEW



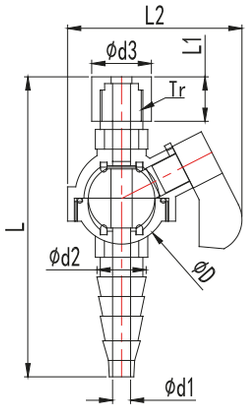

Code	Size DN	Dimensions (mm)							
		D	d1	d2	d3	L	L1	L2	Tr
503010100701	1/4"	28.50	5.50	15.00	20.00	94.00	16.00	53.50	1/4"

N0.	Name	Quantity	Material
01	Nut	1	PVC-U
02	Body	1	PVC-U
03	Ring	1	EPDM
04	Ball	1	PVC-U
05	Ring	1	EPDM
06	Ring	1	EPDM
07	Nozzle	1	PVC-U
08	Lever	1	PVC-U

